BLM LIBRARY
88068467

WSO LIBRARY

PRELIMINARY DRAFT

WILLIAMS TELECOMMUNICATIONS COMPANY
INTERSTATE FIBER OPTIC CABLE
RIGHT-OF-WAY PLAN OF DEVELOPMENT

Prepared for

USDI, BUREAU OF LAND MANAGEMENT
STATE OF WYOMING

Prepared by

WILLIAMS TELECOMMUNICATIONS COMPANY
AND
WOODWARD-CLYDE CONSULTANTS

June 1986

TD
195
.T3
W73
1986a

2800WI-V1

2800 (430)
U-59239

Mr. Steve Kellogg
Project Manager
Woodward-Clyde Consultants
100 Pringle Avenue, Suite 300
Walnut Creek, California 94596-3564

Re: Preliminary Draft Plan of Development for Williams Telecommunications Company Fiber Optic Cable Project, Cheyenne, Wyoming to Evanston, Wyoming Segment; Utah Bureau of Land Management Right-of-Way Application, Serial No. U-59239

Dear Steve:

This letter is sent in response to Woodward-Clyde Consultants letter dated June 20, 1986, requesting the Rawlins and Rock Springs District Offices, Bureau of Land Management (BLM) to review the Preliminary Draft Plan of Development (POD) for the Wyoming segment of Williams Telecommunications Company's (Wiltel) fiber optic communication cable project, BLM right-of-way application, Serial No. U-59239. Copies of the subject POD have been distributed to the Rawlins District Office and to the affected resource area offices in the Rock Springs District. In view of the short response period requested by Woodward-Clyde, each office will be submitting their written comments directly without consolidation through the Rock Springs Office.

Following are comments made by staff members of the Division of Lands and Renewable Resources, Rock Springs District Office.

Page 2-5, Sec. 2.3.1, Paragraph 1. BLM should be furnished maps showing the location of existing roads to be used for access to the project. Temporary use permits will be required for access on BLM roads; i.e., roads other than county roads or state highways.

Page 2-10, Sec. 2.3.9, Paragraph 1, Line 7. Topsoil should be stockpiled separately from other excavated material and replaced last on top of backfilled material.

Page 2-12, Sec. 2.3.12. Hooking up a drag behind the cable plow is an acceptable method of leveling off backfill areas.

DEPARTMENT OF THE INTERIOR
BUREAU OF LAND MANAGEMENT
1986 JUL -3 AM 10: 00
RECEIVED
CHEYENNE, WYOMING

Page 2-13, Sec. 2.3.13, Paragraph 1. Add: The BLM will identify critical stream crossings from right-of-way maps supplied by Wiltel, and Wiltel will review these crossings on-the-ground and provide BLM site-specific plans for protection and rehabilitation of the identified critical crossings. These plans, upon approval by BLM and Wiltel, will be included as amendments to the Plan of Development.

Page 2-13, Sec. 2.3.13, Paragraph 2, Line 7. Is 10 feet additional construction width going to be adequate to accommodate stockpiled streambed material?

Page 2-14, Sec. 2.3.13. It is not necessary to transplant a thick stand of willows, only a few will do. Transplant willows in the spring of the year.

Page 4-2, Sec. 4.1.3, Paragraph 2. The second paragraph relates to a state agency which would more appropriately be included under Sec. 4.1.2 above. Warren Write misspelled, should read Warren White.

Page 6-4, Sec. 6.2.3. Wiltel should identify areas of severe erosion potential and prepare resource protection and rehabilitation plan for amendment to the POD.

Page 6-7, Sec. 6.2.7. Paint exterior metal trim, the door, and air conditioning units Sand Beige (5Y 6/3) identified on BLM's Munsell Soil Color Chart.

Page 7-1, Sec. 7.1., Paragraph 1, Line 13; Omit portion of sentence reading, "...and where the annual precipitation is less than 10 inches..." The entire Wyoming segment of the right-of-way is in the less than 10" rainfall area.

Page 71-, Sec. 7.2. All brush encountered can be "walked down" by running over it with the lead ripper cat.

Page 7-2, Sec. 7.3.3, Paragraph 1, Line 2. Second sentence should be omitted. In areas of poor soils, Gardner saltbush and crested wheatgrass would be expected to germinate.

Page 10-5, Sec. 10.0, Figure 4. Design plat footnoted to indicated that design and conductor spacing may vary by local utility. Design plat should be more specific; i.e., which design will be used. Powerline companies should check with BLM if their design varies.

The 30-day period for the Wyoming State Planning Coordinator's review of the environmental assessment for this project will close on or about July 18, 1986. Anticipating only routine comment, we presume that the Utah BLM will be issuing the right-of-way grant for this project sometime near the end of July 1986. The grant will stipulate that the right-of-way holder secure a written Notice to Proceed (NTP) from the authorized officer in each state affected by the project before construction can commence.

In Wyoming, the Rawlins District Office and the Green River and Kemmerer Resource Area Offices in the Rock Springs District will each issue a NTP for their respective segments of the project. Prerequisites for issuance of the NTP are:

1. The conduct of a preconstruction meeting in each office between representatives of Wiltel and authorized officer representatives of the BLM as listed on pages 2-16 and 2-17 of the Preliminary Draft POD, dated June 1986;

2. final approval of the POD by BLM;

3. completion of BLM screening and Wiltel on-the-ground review of critical stream crossings and severe erosion potential areas over the first 30 miles of public land crossed by the project from the eastern border of each district/resource area, respectively. The critical stream crossings and erosion areas along the remaining route must be screened and reviewed prior to commencement of construction.

Sincerely,

District Manager

cc: Henry Kolesnik
Williams Telecommunications Company
P.O. Box 3448
Tulsa, Oklahoma 74101

Jerry Tharp
260 North American Road
Cheyenne, Wyoming 82007

Bill Noble
2925 Laredo
Billings, Montana 59102

District Manager
Salt Lake City District Office
Attention: Dan Naegle
2370 South 2300 West
Salt Lake City, Utah 84119

Rawlins District Manager
Attention: Larry Jackson

Green River Area Manager and Kemmerer Area Manager

BJordan:lj:07-01-86:0060A

1700 Pringle Avenue, Suite 300
Walnut Creek, CA 94596-3564
415-945-3000

Woodward-Clyde Consultants

June 20, 1986
90269A

WSO LIBRARY

Mr. Larry Jackson
BLM - Rawlins District Office
1300 Third Street
Rawlins, WY 82301

Mr. William Jordan
BLM - Rock Springs District Office
Highway 191 North
Rock Springs, WY 82902

Subject: PRELIMINARY DRAFT, WILLIAMS TELECOMMUNICATIONS COMPANY FIBER OPTIC CABLE, PLAN OF DEVELOPMENT

Dear Messrs:

Please find enclosed your review copies of the Preliminary Draft of the WilTel Fiber Optic Cable Plan of Development (POD) for Wyoming. As discussed between Steve Kellogg and Larry Jackson on 6/20/86, we are transmitting 2 copies of construction drawings (Appendix C to POD) for Larry Jackson and 4 copies for Bill Jordan. Please call Steve Kellogg or Robert Ray at (415) 945-3000 if you have any questions.

As discussed with Larry Jackson on 6/20/86, we would like to receive all BLM comments on the Draft POD by the end of the week ending July 4, 1986. We will call you mid-next week to check on the progress of your review. If there are any major action items required on our part to make the POD acceptable to you, we would like to know as soon as possible so that we can respond accordingly and still meet the tight construction schedule.

Sincerely,
WOODWARD-CLYDE CONSULTANTS

Steve Kellogg

Steve Kellogg
Project Manager

Enclosures: L. Jackson (5-PODs; 2 sets of construction drawings)
B. Jordan (10-PODs; 2 sets of construction drawings)

SK:bv
3001c*

ID 88068467

TD
195
.T3
W73
1986a

PRELIMINARY DRAFT

WILLIAMS TELECOMMUNICATIONS COMPANY
INTERSTATE FIBER OPTIC CABLE
RIGHT-OF-WAY PLAN OF DEVELOPMENT

Prepared for

USDI, BUREAU OF LAND MANAGEMENT
STATE OF WYOMING

Prepared by

WILLIAMS TELECOMMUNICATIONS COMPANY
AND
WOODWARD-CLYDE CONSULTANTS

June 1986

TABLE OF CONTENTS

Section		Page
1.0	PURPOSE, NEED, AND SUMMARY OF PROPOSED ACTION AND ALTERNATIVES	1-1
1.1	Purpose and Need	1-1
1.2	Summary of Proposed Action and Alternatives	1-2
1.2.1	Proposed Action	1-2
1.2.2	Alternatives	1-3
2.0	FACILITY DESIGN, CONSTRUCTION DETAILS, AND CONTINGENCY PLANNING	2-1
2.1	General	2-1
2.2	Specifications	2-2
2.2.1	Fiber Optic Cable	2-2
2.2.2	Regenerator Stations	2-2
2.2.3	Powerline Extensions	2-2
2.2.4	Right-of-Way Markers	2-4
2.2.5	Buried Conduit	2-4
2.2.6	General Maintenance	2-5
2.3	Construction Techniques and Equipment	2-5
2.3.1	Right-of-Way Access	2-5
2.3.2	Construction Schedule	2-6
2.3.3	Workforce	2-6
2.3.4	Construction Staking	2-9
2.3.5	Construction Conferences	2-9
2.3.6	Fencing, Gates, and Livestock	2-9
2.3.7	Regenerator Stations and Associated Facilities	2-10
2.3.8	Right-of-Way Clearing	2-10
2.3.9	Special Construction Procedures	2-10
2.3.10	Trenching/Rock Sawing	2-11
2.3.11	Plowing/Cable Placement	2-12
2.3.12	Backfilling	2-12
2.3.13	Stream and River Crossings	2-13
2.3.14	Wetland Areas	2-16
2.4	Contingency Planning	2-16
2.4.1	Local WilTel Representative	2-16
2.4.2	Federal Authorized Officer(s)	2-16
2.4.3	Procedures for Amending the Plan of Development	2-17

TABLE OF CONTENTS (continued)

Section		Page
3.0	ADDITIONAL FACILITIES	3-1
3.1	Existing Facilities	3-1
3.2	Future Facilities	3-1
4.0	AGENCY INVOLVEMENT	4-1
4.1	Federal, State, and Local	4-1
4.1.1	Federal	4-2
4.1.2	State	4-2
4.1.3	Local	4-2
4.2	Authorizing Actions	4-3
5.0	RIGHT-OF-WAY LOCATION	5-1
5.1	Legal Description	5-1
5.2	Maps	5-1
6.0	RESOURCE VALUES AND ENVIRONMENTAL CONCERNS	6-1
6.1	Consistency with Existing Land Use Planning	6-1
6.2	Resources	6-2
6.2.1	Mineral and Energy Resources	6-2
6.2.2	Cultural and Paleontological Resources	6-2
6.2.3	Soils	6-4
6.2.4	Water Resources	6-5
6.2.5	Vegetation	6-5
6.2.6	Wildlife and Threatened and Endangered Species	6-5
6.2.7	Visual Resources	6-7
6.2.8	Socioeconomic Concerns	6-7
7.0	RIGHT-OF-WAY STABILIZATION AND REHABILITATION	7-1
7.1	Soils Stabilization	7-1
7.2	Disposal of Trees, Stumps, and Brush Cut on the Right-of-Way	7-1

TABLE OF CONTENTS (concluded)

Section	Page
7.3 Seeding Specifications	7-2
7.3.1 Seed Mixture	7-2
7.3.2 Rate of Seed Application (Broadcast Method)	7-2
7.3.3 Method of Seed Application	7-2
7.3.4 Seeding Schedule	7-3
7.3.5 Use of Fertilizer	7-3
8.0 OPERATION AND MAINTENANCE OF THE FACILITIES	8-1
8.1 Inspection and Maintenance	8-1
8.2 Long-Term Access To and Along Right-of-Way	8-1
9.0 TERMINATION AND RESTORATION	9-1
10.0 FIGURES	10-1
APPENDIX A - SAFETY AND ENVIRONMENTAL EDUCATION PROGRAM	A-1
APPENDIX B - WILTEL WYOMING POWERLINE EXTENSION MAPS	B-1
APPENDIX C - WILTEL RIGHT-OF-WAY ALIGNMENT SHEETS FOR WYOMING	C-1

LIST OF TABLES

Table		Page
2.2-1	LOCATIONS OF WILTEL FIBER OPTIC CABLE REGENERATOR STATIONS IN WYOMING	2-3
2.3-1	WILTEL CONSTRUCTION SCHEDULE FOR WYOMING	2-7
4.2-1	SUMMARY OF FEDERAL PERMITS AND AUTHORIZATIONS REQUIRED FOR THE PROPOSED PROJECT	4-4
4.2-2	SUMMARY OF MAJOR STATE AND LOCAL PERMITS REQUIRED FOR THE PROPOSED PROJECT	4-6
5.1-1	LEGAL DESCRIPTION OF WILTEL FIBER OPTIC CABLE RIGHT-OF-WAY IN WYOMING	5-2

1.0 PURPOSE, NEED, AND SUMMARY OF PROPOSED ACTION AND ALTERNATIVES

1.1 PURPOSE AND NEED

Williams Telecommunications Company (the Applicant) is a facilities-based carrier providing long distance and interexchange transmission services. The Applicant currently operates facilities in Illinois, Iowa, Missouri, and Nebraska, and plans to expand into Minnesota. Williams Telecommunications Company is a member of the National Telecommunications Network (NTN), a consortium of seven regional telecommunications companies.

The primary objective and business plan of the Applicant is to expand its role as a facilities-based carrier by construction of an interstate transmission system from the midwestern United States to the west coast. The west coast expansion and current facilities will connect with the National Telecommunications Network, and with local exchanges. The west coast expansion project will provide interexchange transmission services for common carrier telecommunications companies, and will also provide a private communications system for organizations affiliated with the Applicant. The proposed project will provide additional capacity and an alternative means of telecommunication service to the west coast. The proposed expansion would enable the Applicant to provide a capacity of 565 megabytes/second on a fiber optic cable, to other common carriers at the terminals, as well as at intermediate service points along the system.

1.2 SUMMARY OF PROPOSED ACTION AND ALTERNATIVES

1.2.1 PROPOSED ACTION

The proposed project will consist of the construction of a 3/4-inch-diameter fiber optic cable and associated facilities from the Cheyenne junction in Colorado to Los Angeles, California. The system will have the capacity to provide service to and connect with existing telecommunication systems in Cheyenne, Wyoming; Salt Lake City, Utah; Las Vegas, Nevada; and Los Angeles, California. The entire 1166-mile-long fiber optic system will be buried in, or adjacent to, existing pipeline, railroad, buried cable, and road rights-of-way.

The portion of the proposed fiber optic cable route in Wyoming is approximately 353 miles long, of which about 104 miles is on federal (BLM) land and about 249 miles is on state and private land. Ancillary facilities would consist of regenerator and junction stations, and intermediate service point terminals. It is currently planned that 15 regenerator stations (20- to 30-mile intervals) will be constructed along the proposed cable route in Wyoming. A junction station will be located at the regenerator station near Evanston, Wyoming.

The portion of the proposed cable route from the Colorado/Wyoming border to the Riner regenerator station west of Rawlins, Wyoming (about 160 miles), will be constructed within the existing Northwest Central Pipeline System right-of-way (ROW), an affiliate of the Applicant. The cable will normally be plowed into the ground about 10 to 25 feet from the existing pipeline using a cable plow over the majority of this segment. The portion of the proposed cable route between the Riner station and the Wyoming/Utah border (about 194 miles) will normally be plowed into the Pioneer Pipeline Company products pipeline ROW over the majority of this segment. Approximately 33 miles of the aforementioned proposed fiber optic cable route in Wyoming will be trenched (or rock cut) instead of plowed.

Cable construction, including plowing-in, trenching, and regenerator and junction station construction, is expected to require a maximum of 3 months in Wyoming, with up to 1 additional month to complete restoration and reclamation of the ROW. Construction of the proposed Williams Telecommunications Company (WilTel) system fiber optic cable extension through Wyoming is anticipated to begin in mid- to late-July 1986 and be completed by the end of October 1986 (restoration completed by the end of November 1986).

1.2.2 ALTERNATIVES

Several types of alternatives to the proposed project were considered by the Applicant including alternative long distance communication transmission systems and alternative fiber optic cable routings. Alternative transmission systems were dropped from further consideration based primarily on technical performance and cost considerations, as discussed in Section 2.4.1 of the Environmental Assessment (EA) prepared for this project.

One alternative fiber optic cable routing involving Wyoming that was retained for consideration and analyzed in the EA is the Mountain Bell Alternative. This alternative follows an existing Mountain Bell communication line that was installed in in the early 1940s. Since the BLM has identified the route proposed by the Applicant (versus the Mountain Bell Alternative) as the preferred alternative, the Mountain Bell Alternative is not considered further in this Plan of Development (refer to the EA for more information).

2.0 FACILITY DESIGN, CONSTRUCTION DETAILS, AND CONTINGENCY PLANNING

2.1 GENERAL

The portion of the proposed WilTel fiber optic cable expansion project in Wyoming includes the following major components:

- 353 miles of buried fiber optic cable
- 15 regenerator stations at 20- to 30-mile intervals (above-ground, pre-cast concrete and rock structures)
- 1 junction station in Evanston, Wyoming (Note: located at the regenerator station near Evanston)
- 3 overhead powerline extensions ranging in length from 0.25 to 0.75 mile

The proposed cable will be buried at a minimum depth of 42 inches in soil, and up to 72 inches under streams or rivers. In areas of solid bedrock, the minimum burial depth will be 18 inches. Personnel requirements associated with operation of the fiber optic cable in Wyoming will be minimal and limited to routine periodic inspection and maintenance activities by WilTel personnel and/or its contractors.

The BLM will issue a ROW Grant with a 10-foot-wide permanent operational ROW, and a temporary use permit (TUP) for an additional 10-foot-wide construction ROW.

2.2 SPECIFICATIONS

2.2.1 FIBER OPTIC CABLE

The 0.75-inch-diameter fiber optic cable is comprised of glass fibers and outwardly resembles a traditional copper-core telephone cable (Section 10.0). The glass optic fibers are encased in a flexible steel sheath covered with a water-proof plastic coating. The buried cable will be inert, emitting no electrical current, sound, or chemicals.

2.2.2 REGENERATOR STATIONS

Regenerator stations will be skid-mounted, pre-cast concrete and rock structures which measure 10 feet wide x 16 feet long x 9 feet tall. They will be installed on concrete foundations with footings extending below the frost line. Views of a typical regenerator station building from several perspectives (side and end views) are included in Section 10.0. The six regenerator stations to be located on BLM land in Wyoming will require additional rights-of-way adjacent to the cable ROW that are 20 feet wide and 25 feet long. The regenerator stations will be surfaced with a natural tan aggregate finish (Section 10.0) with matching external appurtenances (e.g., air conditioning unit). The locations of all regenerator stations to be constructed in Wyoming are listed in Table 2.2-1. The regenerator station sites will be enclosed by a chain link security fence. None of the WilTel regenerator stations along the ROW in Wyoming will have associated generator buildings or propane tanks, since backup electrical power will be supplied by batteries.

2.2.3 POWERLINE EXTENSIONS

All of the 15 regenerator stations to be constructed in Wyoming have electrical power needs, which will be fulfilled by existing or minor extensions of existing powerlines. Three powerline extensions will be required and they will vary in length from 0.25 to 0.75 mile. Electrical power is already available at the other 12 regenerator station sites.

Table 2.2-1. LOCATIONS OF WILTEL FIBER OPTIC CABLE REGENERATOR STATIONS IN WYOMING[a]

Regenerator Station I.D.	County	Township, Range, Section	Cable Milepost	Land Ownership
WY-1	Laramie	T13N, R70W, Sec. 15	15.8	Private
WY-2	Albany	T15N, R73W, Sec. 29	41.2	Private
WY-3	Albany	T17N, R76W, Sec. 20	64.2	Private
WY-4	Carbon	T19N, R78W, Sec. 19	82.9	Private
WY-5	Carbon	T21N, R83W, Sec. 14	114.2	BLM
WY-6	Carbon	T21N, R85W, Sec. 35	128.0	Private
WY-7	Carbon	T21N, R90W, Sec. 34	159.2	BLM
WY-8	Sweetwater	T20N, R94W, Sec. 27	182.0	Private
WY-9	Sweetwater	T19N, R96W, Sec. 8	196.2	BLM
WY-10	Sweetwater	T20N, R101W, Sec. 28	225.2	BLM
WY-11	Sweetwater	T18N, R105W, Sec. 6	254.2	Private
WY-12	Sweetwater	T18N, R110W, Sec. 14	281.7	BLM
WY-13	Uinta	T18N, R113W, Sec. 35	300.7	Private
WY-14	Uinta	T16N, R116W, Sec. 35	321.2	BLM
WY-15	Uinta	T15N, R120W, Sec. 28	347.7	Private

[a] Refer to map alignment sheets in Appendix C.

Transmission line extensions will be single-phase circuits on single wooden poles (Section 10.0). The 30-foot-high wooden poles to be utilized are designed to be safe for perching raptors in accordance with "Suggested Practices for Raptor Protection on Powerlines," Raptor Research Foundation, 1981. The locations and lengths of the three powerline extensions to be built in Wyoming are listed below and shown on the maps in Appendix B.

Regenerator Station I.D.	County	Cable Milepost	Direction/Distance to Nearest Power Source	Land Ownership Along Powerline Extension Route	Power Company[a]
WY-2	Albany	41.2	West/0.25 mile	Private	PPL
WY-6	Carbon	128.0	North/0.75 mile	Private	PPL
WY-12	Sweetwater	281.7	West/0.25 mile	BLM	PPL

[a] Pacific Power & Light.

The one required powerline extension on BLM land in Wyoming for regenerator station WY-12 will be permitted under a separate ROW Grant to be obtained by Pacific Power & Light Company.

2.2.4 RIGHT-OF-WAY MARKERS

Cable markers will be placed along the alignment at 1000-foot intervals, as well as at route changes, pipeline crossings, bore locations, and water crossings (Section 10.0). Each marker will be installed within 1 foot (horizontally) of the actual cable location and will have an emergency telephone number. In addition, a plastic ribbon tape will be placed in the same alignment as the cable, approximately 2 nominal feet below the ground surface. It will be placed during the cable-laying operation and will contain a message warning of the presence of an optic cable.

2.2.5 BURIED CONDUIT

The majority of the cable will be buried directly in the ground, but several short segments will be placed in 4-inch-diameter steel conduit.

Conduit will be used where the cable crosses pipelines, roads, and railroads, and will be installed by jacking or boring. Conduit will also be installed under certain river and stream crossings that are to be completed by open trenching, as described in Section 2.3.13. At approximately 3-mile intervals, splice boxes will be installed.

2.2.6 GENERAL MAINTENANCE

Once construction is completed, the WilTel optic fiber cable system will be unmanned and will require very little maintenance. The cable itself will require no regular maintenance, and it will be re-excavated only in the event of a cable cut or other physical damage to the sheathing or optical fibers. This is expected to be a very rare occurrence. No vegetation control or ROW management is anticipated to be necessary. However, if noxious weeds are introduced as a result of cable installation, vegetative control will be implemented, as necessary, subject to the approval of the Authorized Officer (BLM). The regenerator stations will be visited on a routine basis by a WilTel employee to inspect for signs of vandalism and equipment failure. Access to the regenerator sites will be gained via existing public and private roads. No special provisions will be required for maintenance access. The powerlines, which will serve the regenerators, will be maintained by the respective electric utilities. They will receive the same treatment given other low-voltage powerlines in the area.

2.3 CONSTRUCTION TECHNIQUES AND EQUIPMENT

2.3.1 RIGHT-OF-WAY ACCESS

All equipment and materials will be transported to the ROW on existing public and/or private roads. No new roads will be constructed for purposes relating to this project and no existing roads will require upgrading. Upon completion of construction, any damaged access roads will be rehabilitated to their pre-construction condition.

2.3.2 CONSTRUCTION SCHEDULE

Construction of the proposed WilTel fiber optic cable system in Wyoming will be performed using three (3) main spreads, as shown in Table 2.3-1. The three spreads will work concurrently in order to complete installation of the cable system prior to winter.

The three major categories of work items associated with installation of the cable system are:

- o Cable placement
- o Preparation and setting of regenerator stations
- o Cable splicing (in vans)

In general, the first phase of construction will be the civil work, which will involve the placement of conduit beneath certain road, river, and railroad crossings. Stream crossings and other sensitive areas will be constructed in advance and scheduled, as necessary, to accommodate concerns and stipulations of the Wyoming Game and Fish Department. The typical sequence of events for placement of cable is generally for the ripper plow crews to be followed by the cable plow crew, which will be followed by the restoration and cable location marker sign crews.

The schedule presented in Table 2.3-1 could vary depending on the date of issuance of the ROW Grant, weather conditions, and other factors. A final schedule which takes these factors into account will be provided to the BLM at the pre-construction meeting. It is expected that the fiber optic cable will be installed along the entire route by October 31, 1986, and that ROW restoration and reseeding will be completed no later than the end of November 1986.

2.3.3 WORKFORCE

Construction crew sizes and types of vehicles will vary depending on the linear length of construction sections and requirements at the

Table 2.3-1 WILTEL CONSTRUCTION SCHEDULE FOR WYOMING

Construction Spread I.D.	Spread Location[a]	Approximate Miles	Estimated Construction Period[b] (weeks)
1	CO/WY Border to Riner Station	160	12
2	Riner Station to Rock Springs	95	11
3	Rock Springs to WY/UT Border	98	12

[a] Refer to map alignment sheets in Appendix C.

[b] Scheduled to be constructed concurrently; planned starting date is mid- to late-July, 1986.

construction site. About 50 to 75 individuals per section may be required during construction, in addition to 8 to 10 WilTel supervisor personnel. The estimated number of individuals and types of vehicles required to perform the various construction activities are listed below:

Operation	Personnel	Vehicle/Equipment
Fencing Crew	2	1 pickup
Bore Crew	4	Back-hoe, small dozer, 2-ton flat-bed truck, tampers, air compressor, 3 pickups, boring or jacking machine
Back-Hoe Trench	6	Back-hoe(s), small dozer, 3 pickups, 2-ton truck
Machine Trench	6	Trencher(s), back-hoe(s), dozer, 2-ton truck, 3 pickups
Ripper Plow	4	2 D-8 dozers with ripper plows, 2-ton truck, 2 pickups
Rock Saw	12	3 rock saws, 3 air compressors, 3 jack hammers, 9 pickups, 3 2-ton trucks, 3 back-hoes, dozer
Cable Plow	9	Cable plow mounted on tractor, dozer tractor with winch, 2-ton truck, 2 pickups, back-hoe
Regenerator Site Crew	6	Back-hoe, 2-ton truck, 2 pickups, crane
Splice Pit Crew	3	Back-hoe, 2 pickups
Splicing Crew	6	2 splicing vans, 2 pickups, splicing and testing equipment
Fuel and Maintenance Crew	4	Welding trucks, small dozer, 2 pickups, 1 fuel truck, 1 grease truck
Cleanup and Reclamation	6	1 small motor grader, 3 pickups, dozer, 2-ton truck, tractor

Safety requirements and environmental considerations for construction personnel are discussed in Appendix A. These requirements relate to topics

construction site. About 50 to 75 activities per section may be ongoing during construction, in addition to 2 to 10 walkout supervisory personnel. The estimated number of individuals and types of vehicles required to perform the various construction activities are listed below:

Operation	Personnel	Vehicle/Equipment
Packing Crew	2	1 pickup
Base Crew	4	Back-hoe, small dozer, 2-ton flat-bed truck, compre, air compressor, 1 pickup, boring or jacking machine
Back-hoe Trench	6	Back-hoe(s), small dozer, 1 pickup, 2-ton truck
Machine Trench	6	Trencher(s), back-hoe(s), dozer, 2-ton truck, 3 pickups
Ripper Plow	4	2 D-8 dozers with ripper plows, 2-ton truck, 2 pickups
Rock Saw	12	3 rock saws, 3 air compressors, 3 jack hammers, 3 pickups, 2 2-ton trucks, 3 back-hoes, dozer
Cable Plow	3	Cable plow mounted on tractor, dozer, tractor with winch, 2-ton truck, 2 pickups, back-hoe
Temporary Site Crew	6	Back-hoe, 2-ton truck, 2 pickups, crane
Splice Pit Crew	2	Back-hoe, 2 pickups
Splicing Crew	6	2 splicing vans, 3 pickups, splicing and testing equipment
Fuel and Maintenance Crew	4	Mobiling trucks, small dozer, 2 pickups, 1 fuel truck, 1 grease truck
Cleanup and Reclamation	6	1 small motor grader, 3 pickups, dozer, 2-ton truck, tractor

Safety requirements and environmental considerations for construction personnel are discussed in Appendix A. These requirements relate to safety

including worker conduct, protection of cultural resources and threatened and endangered species, sanitation, personal protective equipment, fire protection, use of vehicles, use of gas and compressed air equipment, operations involving excavation and trenching.

Contractors will be responsible for taking necessary safety precautions to ensure that persons and property are protected from damage, injury or illness arising from construction of the project. Contractors will be required to comply with local, municipal, state, and federal laws and regulations pertaining to health and safety.

2.3.4 CONSTRUCTION STAKING

The centerline of the proposed cable route will be staked at 100-foot intervals prior to construction. Existing pipelines adjacent to the cable route will be staked at intervals not to exceed 200 feet, and at changes in direction to clearly delineate the location of such pipelines.

2.3.5 CONSTRUCTION CONFERENCES

Pre-construction meetings will take place between WilTel, the BLM, and the construction contractor(s) prior to the commencement of work within each of the four BLM resource areas involved in Wyoming. Once construction has commenced, subsequent conferences will convene as deemed necessary by the BLM. WilTel construction managers will contact the local BLM offices on a regular basis to keep them informed of construction progress.

2.3.6 FENCING, GATES, AND LIVESTOCK

All affected permit holders on public lands will be notified by WilTel prior to initiation of project construction in the affected area. All fences, gates or other structures disturbed during construction will be replaced and/or returned to their original condition the same day

(Section 10.0). Downed fences will not be left unattended at any time. Previously authorized movements of sheep and cattle along and across the ROW will not be interrupted by cable laying activities.

2.3.7 REGENERATOR STATIONS AND ASSOCIATED FACILITIES

Regenerator stations will be located at 20- to 30-mile intervals along the entire fiber optic cable route (see alignment sheets in Appendix C). Station buildings will be skid mounted, fabricated pre-cast concrete panels measuring 10 feet x 16 feet x 9 feet tall. They will be installed on concrete foundations with footings extending below the frost line. Regenerator stations will be hauled to the sites on flatbed semi-trailers and they will be unloaded and placed on prepared foundations.

2.3.8 RIGHT-OF-WAY CLEARING

Clearing of vegetation along the construction ROW will be kept to a minimum. Where clearing of vegetation is required to allow safe movement of equipment, the bulldozer blade will be set at a height to minimize excessive stripping of topsoil. Slash will be disposed of by lopping and scattering it within the disturbed ROW.

2.3.9 SPECIAL CONSTRUCTION PROCEDURES

Boring or jacking operations will be required to install the 4-inch diameter steel conduit beneath certain roadways, railroad tracks, and other substructures (Section 10.0). An auger boring machine or hydraulic jacking machine will be used, as appropriate. At the bore location it will be necessary to excavate a pit that is about 6 feet wide x 25 feet long, and the depth will vary from location to location but is anticipated to range from 4 to 10 feet. The pits will be excavated with a back-hoe and will meet Occupational Safety and Health Act (OSHA) standards. When the boring operation is complete, a small dozer or back-hoe will be used to

backfill and compact the pits to 95 percent of the undisturbed soil density.

2.3.10 TRENCHING/ROCK SAWING

The normal method of cable installation will be to use a cable plow, but in certain areas and situations it will be necessary to trench prior to cable placement. Trenching will be kept to a minimum and will only be employed where absolutely necessary. Approximately 33 miles of trenching or rock sawing will be required. The primary situations where trenching will be required are:

- Rocky areas where installation by plowing is not possible
- At certain stream or river crossings where conduit is to be installed
- Cable splice box locations
- Plow train start and stop points ("bell holes")
- Pipeline and other utility crossings
- Restrictive/tight areas that are too narrow to accommodate a cable plow
- Excavation pits where boring is required, such as major road crossings

Normally a back-hoe or machine trencher will be used to dig a linear trench to a minimum depth of 42 inches and an approximate width of 36 inches, except for slice pits which will be 6 feet square. Excavated material will be used to backfill the trench either by means of a back-hoe or a small dozer. Excavated trench areas that will remain open more than one day will be fenced. The disturbed area will be compacted to 95 percent of its original volume to allow for future settlement. Construction of trenches will follow OSHA regulations.

A rock saw will be used in areas where bedrock prevents trenching with a back-hoe. Rock saws will be track mounted or rubber-tire mounted. The

rock saw will prepare a trench 6 to 8 inches wide and a minimum of 18 inches deep. Rock sawing will be done in advance of the cable-laying operation.

2.3.11 PLOWING/CABLE PLACEMENT

Most of the cable will be buried by means of the cable plow, which can be used in most areas where the substrate is soil. The plowing operation will utilize multiple large tractors, the first of which pulls a ripping plow through the soil at a minimum depth of 42 inches creating a 4- to 6-inch-wide slot in the soil. The ripper plow normally will produce an adequate slot in one pass through the ROW; however, in rocky areas (or consolidated soil areas) more passes or an additional ripper may be required. A cable bulldozer will follow the ripping plow(s) with the cable plow, which places the cable into the 4- to 6-inch-wide slot.

In situations where the cable will pass through a conduit, the cable will be laid on the ground in a "figure-eight" pattern and the forward end of the cable will be pulled through the conduit, utilizing a small winch truck. The cable will then be rewound on the spool and plowing operations will resume. A 6-foot x 6-foot splice pit will be required at all cable reel ends (approximately every 3.5 miles) to permit splicing the cable ends together and to accommodate a buried splice locator.

2.3.12 BACKFILLING

Backfilling of trenches will be performed with a small motor grader, bulldozer, or backhoe and will replace the spoil that was excavated from the trench. Backfilling of the trench will often leave a small crown on top of the trench, which will then be compacted by the tires of a back-hoe or small dozer. Compaction will be assured in areas where the rock saw is used by one of several methods. In most cases, sufficient soil will be mixed in with backfilled material to fill the trench with a compact mass.

Alternately, a concrete slurry will be poured into the trench after conduit has been placed in it. Another method to be employed will utilize a soil additive such as Perma Soil, which acts as a hardening agent, but still permits percolation of water and supports vegetation.

2.3.13 STREAM AND RIVER CROSSINGS

The cable will be trenched or plowed through 148 intermittent streams and 32 perennial streams (refer to Appendix D of the EA for specific locations). The minimum required depth for cable placement under streams and rivers is 48 inches, but may be as great as 72 inches depending on scour depth. A typical cross-section of a cable placement in a stream or river is shown in Section 10.0.

All banks and streambeds will be immediately restored to their original contours, stream bottom widths and channel gradients. Only native material will be used for backfilling with streambeds. Disturbed areas will be protected by rip-rapping or other bank-stabilization measures, as approved by the Authorized Officer. Stream and river crossings will be completed without damming or diverting the entire flow of watercourses. At crossings to be completed by the trench method, excavated streambed material will be stockpiled outside the streambed prior to replacement following cable installation. All streambed work will be conducted in a timely fashion, and will usually be completed within one day. At larger river crossings, work will be conducted on continuous work days until completed.

<u>Construction Techniques</u>

<u>Cable Plow Crossings</u>. The majority of intermittent and small perennial streams will be crossed by plowing in the cable with a cable plow. Construction methods would be similar to methods discussed in Section 2.3.11. Limited grading of banks may be required to facilitate the plowing operation. Immediately after cable installation, the banks will be restored to original contour and stabilized, as discussed in Section 7.1.

Trench Crossings. Cable plow construction will not be feasible on streams with steep slopes or rocky bottoms. In addition, avoidance of construction operations during the critical fish-spawning period (Oct. 1-Nov. 15) will require trenching within the following Class I, II, and III rated streams: Rock Creek, Medicine Bow River, Wagonhound Creek, Black's Fork, and Bear River. Trenching will be required in these streams because casing (conduit) must be installed before October 1. This will allow the cable to be pulled through the casing without disruption of the streambed after October 1, if necessary due to the progress of construction.

The trench crossings will be dug by backhoes or draglines working from either side of the stream, where possible. Spoil will be stored in an area outside the river channel. Spoil will be placed back into the open trench after installation of the casing. The streambed will be restored to original condition.

Preliminary assessment indicates that the North Platte, Green River, first crossing of Black's Fork (Section 10.0), and Bear rivers will all require some grading of banks. Grading of banks on other streams will be kept to the minimum required. Displaced material from grading operations will be stored outside the stream channel. Upon installation of casing pipe and completion of backfilling, the banks will be restored to original condition including any stabilization required.

The construction will require some clearing in order to install the casing. No vegetation will be removed outside the 20-foot construction ROW. Vegetation disturbance will be kept to a minimum within the ROW. No large trees will be removed. If any willows need to be removed, they will be saved and transplanted outside the construction ROW.

Special Consideration Stream Crossings. The Green and North Platte rivers will require specialized construction techniques and/or procedures

because: 1) they are designated Class I streams by USFWS; 2) they are larger and wider than other streams crossed; and 3) they are both characterized by steep banks on one side of the channel. Profiles of the Green and North Platte rivers are included in Section 10.0.

In addition to the construction techniques, stabilization, and erosion control measures described above, the following measures will be employed for streambed crossings and streambank trenching of the Green and North Platte rivers.

Streambed Crossings.

- Work in the streambed will be performed on consecutive work days until the crossing is complete.

- Streambed trenching will be conducted by backhoe and/or draglines from either side of the stream channel, where possible. However, both rivers are relatively wide and work equipment may be placed in stream channels for limited periods.

- Streambed work will be conducted in a manner that will allow unimpeded flow of water.

Streambank Trenching.

- Temporary diversion dikes or diversion ditches will be placed around storage areas for excavated or grading material in order to prevent runoff from entering the stream channel.

- Additional stabilization of graded streambanks will include waterbars (see Section 7.0) and plugging of excavated trenches with sandbags every 50 feet.

For crossings of the N. Platte and Green rivers, WilTel agrees to notify the BLM Authorized Officer 48 hours prior to initiation of stream crossings.

2.3.14 WETLAND AREAS

Wetland areas traversed by the proposed WilTel cable route in Wyoming are all located on private land. Construction and reclamation procedures for these areas will be ascertained via negotiations with private landowners. It is anticipated that equipment such as Ryan's Plow will be used in these areas.

2.4 CONTINGENCY PLANNING

WilTel will designate a representative(s) who shall have the authority to act upon and to implement instructions from the Authorized Officer. WilTel representative will be available for communication with the Authorized Officer within a reasonable time when construction or other surface disturbing activities are underway.

2.4.1 LOCAL WILTEL REPRESENTATIVE

WilTel's representative is Mr. Jerry Tharp, Construction Manager, 260 North American Road, Cheyenne, Wyoming, 82007; Telephone (307) 778-3133.

2.4.2 FEDERAL AUTHORIZED OFFICER(S)

Rock Springs

- Authorized Officer (307) 382-5350:
  Mr. Don Sweep, District Manager or
  Mr. Bill Jordan, District Realty Specialist

- Authorized Officer Representatives:

  Kemmerer Resource Area (307) 877-3933:

  Mr. Chuck Williams, Compliance Specialist
  Ms. Renee Snyder, Compliance Specialist
  Mr. Dave Vlcek, Archaeologist
  Mr. Chester Novak, Soil Scientist
  Mr. Bruce Baker, Wildlife Biologist

  Green River Resource Area (307) 362-6422 or 362-7350:

  Ms. Carmel Swidler, Archaeologist
  Mr. Dick Kail, Compliance Specialist

Rawlins

- Authorized Officer (307) 324-7171: Mr. Richard Bastin, District Manager

- Authorized Officer Representative:

  Rawlins District Office (307) 324-7171:

  Mr. Larry Jackson, Realty Specialist
  Mr. Mike Bies, Archaeologist

  Divide Resource Area (307) 324-4841:

  Ms. Penny Smalley, Realty Specialist
  Ms. Marilyn Nickerson, Realty Specialist
  Mr. Walter George, Compliance Specialist
  Mr. Robert Rood, Compliance Specialist

2.4.3 PROCEDURES FOR AMENDING THE PLAN OF DEVELOPMENT

The following procedures have been developed to document any deviations from this Plan of Development.

A master Plan of Development (POD) will be maintained by WilTel at the

construction office. The master POD will have a list of all revisions as well as the revised sheets. Any deviations from the POD will be documented in a revision. Revisions will be submitted to the Authorized Officer for approval. Upon written approval, copies of the revision will be distributed to holders of the POD as designated by WilTel and the Authorized Officer.

3.0
ADDITIONAL FACILITIES

3.1 EXISTING FACILITIES

There are no existing facilities along the ROW, public or private, which are to be considered components of this project.

3.2 FUTURE FACILITIES

After project construction is complete (including installation of 15 regenerator station facilities in Wyoming), there will be no further components built within the project ROW.

4.0
AGENCY INVOLVEMENT

4.1 FEDERAL, STATE, AND LOCAL

The proposed WilTel fiber optic telecommunications cable and associated facilities will cross the Rawlins and Rock Springs Bureau of Land Management (BLM) districts in Wyoming. Within these BLM districts, the proposed route crosses the Medicine Bow, Divide, Green River, and Kemmerer resource areas. Managers and resource specialists in the district and resource area offices have been consulted. The project lead officer for the state of Wyoming is Mr. Bill Jordan, District Realty Specialist, Rock Springs. The district lead officers in Rawlins are Mr. Larry Jackson, District Realty Specialist, and Ms. Penelope Smalley, Resource Area Realty Specialist.

Interagency coordination for all aspects of the project, including NEPA and construction compliance, is under the lead direction of the Salt Lake District Office, Salt Lake City, Utah. The project manager is Mr. Dan Naegle, District Realty Specialist, who is assisted by Ms. Terri Yeckley, Environmental Coordinator. The project does not involve crossing any other federal lands in Wyoming.

The following agencies have been contacted for information relating to this project:

4.1.1 FEDERAL

Bureau of Land Management
- Rawlins District
  - Medicine Bow Resource Area
  - Divide Resource Area
- Rock Springs District
  - Green River Resource Area
  - Kemmerer Resource Area

U.S. Fish and Wildlife Service
- Denver Regional Office

Soil Conservation Service
- Casper State Office
  - Cheyenne Area Office

U.S. Forest Service
- Medicine Bow National Forest

4.1.2 STATE

State Planning Office, Research and Statistics
State Department of Environmental Quality, Land Quality Division
Wyoming Game and Fish Department

4.1.3 LOCAL

Chamber of Commerce, Rawlins

An Environmental Assessment has been prepared and presented to Mr. Warren Write, Governor's State Clearhouse Coordinator, Cheyenne,

Wyoming, for review and consultation.

4.2 AUTHORIZING ACTIONS

Authorizing actions including federal, state, and local permits and authorizations required for the proposed project are presented in Tables 4.2-1 and 4.2-2.

Table 4.2-1. SUMMARY OF FEDERAL PERMITS AND AUTHORIZATIONS REQUIRED FOR THE PROPOSED PROJECT

Concern	Action Requiring Permit, Approval, or Review	Agency	Permit, Approval, or Review	Relevant Legislation
Rights-of-Way Over Land Under Federal Jurisdiction	Construction, Operation, and Abandonment of Facilities on Federal Land	Bureau of Land Management (BLM)	Grant of Right-of Way	Federal Land Policy and Management Act
National Environmental Policy Act (NEPA) Compliance	Granting of Rights-of-Way Over Land Under Federal Jurisdiction for Implementation of Project	Lead Agencies - BLM; Cooperating Agencies; Forest Service, Fish and Wildlife Service		NEPA
Water Resources	Construction Across Streams and Rivers	Army Corps of Engineers	General Easement	10 USC 2668, 2669 43 USC 961
	Discharge of Dredge and Fill Materials		404 Permit (Nationwide)	Clean Water Act
	Placement of Structures and Work in Navigable Waters		Section 10 Permit	River and Harbors Act
Biological Resources	Grant of Right-of-Way by Federal Land Management Agency	Fish and Wildlife Service	Endangered Species Act Compliance by Federal Land Management Agency and Lead Agency	Endangered Species Act, Section 7
Biological Resources	Grant of Right-of-Way by Federal Land Management Agency Involving Aquatic Habitats		Fish and Wildlife Coordination Act Compliance by Federal Land Management Agency and Lead Agency	Fish and Wildlife Coordination Act

Table 4.2-1. SUMMARY OF FEDERAL PERMITS AND AUTHORIZATIONS REQUIRED FOR THE PROPOSED PROJECT (concluded)

Concern	Action Requiring Permit, Approval, or Review	Agency	Permit, Approval, or Review	Relevant Legislation
Cultural Resources	Grant of Right-of-Way by Federal Land Management Agency	BLM, FS, Advisory Council on Historic Preservation, Inter-agency Archeological Service	National Historic Preservation Act Compliance by Federal Land Management Agency and Lead Agency	National Historic Preservation Act, Section 106
		All	Emergency Procedures for Cultural and Historic Properties Discovered During Construction	Archeological and Historic Preservation Act (AHPA) Public Law 93291
Native Americans		All	Protection and Preser-vation of Native American Religious and Cultural Rights and Practices	American Indian Religious Freedom Act (AIRFA)
Construction	Laying of Cable/ Construction of Repeater Station	Occupational Safety and Health Administration (OSHA)	Regulations and Standards	29 CFR 1910 29 CFR 1926

Table 4.2-2. SUMMARY OF MAJOR STATE AND LOCAL PERMITS REQUIRED FOR THE PROPOSED PROJECT

Concern	Action Requiring Permit, Approval, or Review	Agency	Permit, Approval, or Review	Relevant Legislation
Land Use	Crossing State School Lands	Wyoming Board of Land Commissioners	ROW Easement	Wyoming Statutes 3.6-14 and 36-34 (1957)
Land Use	All New Construction Within State with Estimated Cost of $97.45 million or above	Wyoming Industrial Siting Council	Information Applicant Certificate of Insufficient Jurisdiction Industrial Facility Permit	Wyoming Industrial Development Information and Siting Act
Air Quality	Emission of Air Pollutants	Department of Environmental Quality	Air Quality Permit to Construct	Wyoming Statutes Ch. 9.1, Articles 1-11
Water Resources	Construction, Hydrostatic Testing, Operation	State Engineer	Temporary Water Rights for Construction	Wyoming Statutes 41-4,41-10
Right-of-Way Encroachment	Linear Project Crossing or Otherwise Encroaching on State Highway ROW	Department of Highways	Utility Crossing Permit	
Right-of-Way Encroachment	Linear Project Crossing or Otherwise Encroaching on County Highway ROW	Laramie County, Albany County, and Carbon County	Utility Crossing Permit	

Table 4.2-2. SUMMARY OF MAJOR STATE AND LOCAL PERMITS REQUIRED FOR THE PROPOSED PROJECT (concluded)

Concern	Action Requiring Permit, Approval, or Review	Agency	Permit, Approval, or Review	Relevant Legislation
Right-of-Way Encroachment	Linear Project Crossing or Otherwise Encroaching on City Street ROW	Evanston, Green River, and Rock Springs	Utility Crossing Permit	
Right-of-Way Encroachment	Linear Project Crossing or Otherwise Encroaching on Railroad ROW	Union Pacific Railroad	Agreement to Construct	
Cultural Resources		Office of Historic Preservation	Consultation with State Historic Preservation Officer and Lead Federal Agency	NHPA, ARPA
Land Use	Construction Outside Existing ROW	Office of Commissioner of of Public Lands	Application for new (virgin) ROW	
	Use of Existing ROW		Subordination Agreement	

5.0 RIGHT-OF-WAY LOCATION

5.1 LEGAL DESCRIPTION

The legal descriptions for the Wyoming portion of the proposed WilTel fiber optic cable ROW are presented in Table 5.1-1.

5.2 MAPS

Detailed map alignment sheets for the Wyoming portion of the proposed WilTel fiber optic cable system are presented in Appendix C.

Table 5.1-1. LEGAL DESCRIPTION OF WILTEL FIBER OPTIC CABLE RIGHT-OF-WAY IN WYOMING[a]

County	Township	Range	Sections
Laramie	T12N	R67W	19
Laramie	T12N	R68W	5,6,8,9,10,13,14,15,24
Laramie	T12N	R69W	1,2
Laramie	T13N	R69W	19,20,28,29,33,34,35
Laramie/Albany	T13N	R70W	7,8,13,14,15,16,17,24
Albany	T13N	R71W	2,3,4,11,12
Albany	T14N	R71W	30,31,32,33
Albany	T14N	R72W	25,26,27,28,29,30,36
Albany	T14N	R73W	2,3,4,10,14,15,23,25,26
Albany	T15N	R73W	18,19,20,28,29,33
Albany	T15N	R74W	3,4,11,12,13
Albany	T16N	R74W	19,29,30,32,33
Albany	T16N	R75W	4,5,9,10,11,13,14,15,24
Albany	T17N	R75W	30,31,32
Albany	T17N	R76W	7,17,18,20,21,22,23,25,26
Albany/Carbon	T17N	R77W	1,2,3,12
Albany/Carbon	T18N	R77W	7,17,18,20,21,28,29,33,34
Carbon	T18N	R78W	2,3,11,12
Carbon	T19N	R78W	19,20,28,29,33,34
Carbon	T19N	R79W	3,4,5,10,11,13,14,24
Carbon	T20N	R79W	31,32
Carbon	T20N	R80W	6,7,8,15,16,17,22,23,25,26,36
Carbon	T20N	R81W	1
Carbon	T21N	R80W	31
Carbon	T21N	R81W	16,17,18,21,22,23,25,26,36
Carbon	T21N	R82W	13,14,15,16,17,18
Carbon	T21N	R83W	13,14,15,16,17,19,20,30
Carbon	T21N	R84W	25,26,31,32,33,34,35
Carbon	T21N	R85W	31,32,33,34,35,36
Carbon	T21N	R86W	31,32,33,34,35,36
Carbon	T21N	R87W	26,27,28,29,30,35,36
Carbon	T21N	R88W	19,20,21,22,25,26,27
Carbon	T21N	T89W	21,22,23,24,28,29,30
Sweetwater	T21N	R90W	25,26,31,32,33,34,35
Sweetwater	T21N	R91W	34,35,36
Sweetwater	T20N	R91W	5,6
Sweetwater	T20N	R92W	1,2,8,9,10,11,17,18
Sweetwater	T20N	R93W	13,14,15,16,17,19,20
Sweetwater	T20N	R94W	23,24,26,27,28,29,31,32
Sweetwater	T20N	R95W	34,35,36
Sweetwater	T19N	R95W	2,3,4,5,6
Sweetwater	T19N	R96W	1,2,7,8,9,10,11
Sweetwater	T19N	R97W	7,8,10,11,12,15,16,17,18
Sweetwater	T19N	R98W	7,8,9,10,11,12

Table 5.1-1. LEGAL DESCRIPTION OF WILTEL FIBER OPTIC CABLE RIGHT-OF-WAY IN WYOMING[a] (concluded)

County	Township	Range	Section
Sweetwater	T19N	R99W	7,8,9,10,11,12
Sweetwater	T19N	R100W	4,5,9,10,11,12
Sweetwater	T20N	R100W	31,32
Sweetwater	T20N	R101W	25,26,27,28,29,30,34,35,36
Sweetwater	T20N	R102W	21,22,23,24,25,28,29,31,32
Sweetwater	T20N	R103W	36
Sweetwater	T19N	R103W	1,2,3,7,8,9,10
Sweetwater	T19N	R104W	7,8,9,10,11,12,14,15
Sweetwater	T19N	R105W	11,12,14,15,21,22,28,33
Sweetwater	T18N	R105W	4,5,6,7
Sweetwater	T18N	R106W	11,12,14,15,16,19,20,21,30
Sweetwater	T18N	R107W	19,21,22,25,26,27,28,29,30
Sweetwater	T18N	R108W	17,18,20,21,22,23,24
Sweetwater	T18N	R109W	13,14,15,16,17,18
Sweetwater	T18N	R110W	13,14,15,19,20,21,22
Sweetwater	T18N	R111W	18,19,20,21,22,23,24
Sweetwater/Uinta	T18N	R112W	13,14,15,19,20,21,22,30
Uinta	T18N	R113W	25,34,35,36
Uinta	T17N	R113W	3,4,8,9,17,18
Uinta	T17N	R114W	13,23,24,26,27,34
Uinta	T16N	R114W	5,6
Uinta	T16N	R115W	1,11,12,14,15,20,21,22,29,30
Uinta	T16N	R116W	25,26,33,34,35
Uinta	T15N	R116W	4,5,6
Uinta	T15N	R117W	1,8,9,10,11,12,17,18
Uinta	T15N	R118W	13,14,15,19,20,21,22
Uinta	T15N	R119W	20,21,22,23,24,29,30
Uinta	T15N	R120W	25,26,27,28,29,30,32,33
Uinta	T15N	R121W	25,26,27

[a] Refer to map alignment sheets in Appendix C.

6.0
RESOURCE VALUES AND ENVIRONMENTAL CONCERNS

6.1 CONSISTENCY WITH EXISTING LAND USE PLANNING

The proposed WilTel fiber optic cable will be installed primarily within existing rights-of-way through the entire state of Wyoming. The proposed route traverses primarily private land in the eastern portion of Wyoming with minor portions of Bureau of Land Management (BLM) and state lands. In the western portion of the state the proposed route traverses a checkerboard ownership pattern of BLM and private land except for an approximately 10-mile stretch of private land from Evanston to the Wyoming/Utah border. The proposed route crosses about 104 miles of federal land (BLM), and about 249 miles of state or private land. The majority of the land traversed by the proposed route is rangeland, followed by agricultural land, and barren land. Urban or built-up land traversed by the proposed cable is primarily associated with the cities of Laramie, Rawlins, Rock Springs, Green River, and Evanston. Installation of the cable will have no impact on existing land uses along the ROW.

Prior to initiating construction-related activities, the Applicant will identify and purchase ROW easements from the private landowners along the route. The easement will provide for compensation to the landowner for the granting of the ROW. The Applicant will notify all potentially affected owners, tenants, and lessees of private land and the lessees of public lands, in advance of initiating construction activities on their respective properties. All potentially affected permit holders or ranchers who could be working in the ROW vicinity during cable installation periods will also be notified by the Applicant.

The cable will be in conformance with all pertinent BLM land use planning efforts and with the regulations in 43 CFR 2800. It will also be consistent with associated state, county and local government policies and zoning efforts.

6.2 RESOURCES

6.2.1 MINERAL AND ENERGY RESOURCES

The proposed WilTel fiber optic cable route crosses numerous pipeline and utility rights-of-way. The Applicant will hire a "bluestake" company to locate existing utility or pipeline rights-of-way along the route, and will notify all grant holders at least two days prior to excavation under or around existing utilities or pipelines. Placement and operation of the cable will be compatible with all existing rights-of-way and will in no way conflict with current uses or affect the present mineral status along the cable route.

6.2.2 CULTURAL AND PALEONTOLOGICAL RESOURCES

Based on the information contained in the Class I Cultural Resource Inventory Report, procedures to identify and protect cultural resources have been developed in consultation with State Historic Preservation Officer and the project permitting agency. Procedures to be employed are as follows:

Class III cultural resource inventories are being conducted in accordance with the following procedures, which were agreed upon by the Wyoming State Historic Preservation in a meeting conducted on May 14, 1986, in Rock Springs.

Class III cultural resource surveys are being conducted on all portions of the right-of-way where the cable will be buried by trenching, rock-sawing, or any means other than plowing. Significant cultural resource

sites in those areas will be identified and the cable will be routed around them wherever possible. If significant sites will be affected (i.e., National Register eligible), appropriate mitigation measures will be developed by BLM in consultation with the Wyoming State Historic Preservation Officer (SHPO) and the Advisory Council on Historic Preservation. All construction operations will be carried out in accordance with recommendations made in the Class III report and will be approved by the BLM.

In addition, unauthorized collecting of artifacts during project construction and operation would be restricted, and measures would be taken to prevent identified sites from becoming public knowledge.

Williams Telecommunications Company, or any person working on its behalf, will notify the Authorized Officer regarding any objects or resources of cultural and/or paleontological value discovered as a result or project construction and/or operations. Williams Telecommunications shall suspend all activities in the vicinity of such a discovery until notified to proceed by the Authorized Officer. The Authorized Officer will evaluate, or will have evaluated, such discoveries not later than five (5) working days after being notified, and will determine what action shall be taken with respect to such discoveries. The decision as to the appropriate measures to mitigate adverse effects to significant cultural resources will be made by the Authorized Officer after consulting with Williams Telecommunications. Williams Telecommunications shall be responsible for the evaluation, and for any mitigative measures.

The Applicant has designed a Safety and Environmental Education Plan (see Appendix A) to be read by all project workers. The text generally describes the types of important resources that are present in the project area and their susceptibilitities to potential project-related effects; mitigation measures committed to by the Applicant; and the roles of Applicant and contractor personnel in implementing these mitigation measures. The text will be presented to all company and supervisory contractor personnel for required review before construction activities are

initiated. The environmental education program emphasizes that all measures committed to by the Applicant must be adhered to by all project personnel. The need for protection of fragile, and often irreplaceable cultural and paleontological resources is highlighted, along with the means for doing so. All project personnel will be made aware of the prohibition against collecting or willfully disturbing any such resource(s) and the consequences of violating such prohibitions.

The Applicant is committed to the stipulation that any project personnel found violating any such prohibition, or in any way willfully causing damage to or interfering with any prescribed mitigation measure, will be immediately removed from the project area and will be subject to termination of employment.

6.2.3 SOILS

Soil disturbance within the WilTel fiber optic cable ROW will be limited to the plow/trench line and heavy equipment tracks. The majority of the 353 miles of the cable to be installed in Wyoming will be plowed (total disturbed area will be approximately 4 to 6 inches wide with the exception of isolated areas of large rocks or severely compacted soils). Approximately 33 miles of ROW within Wyoming will be trenched (maximum disturbed area will be approximately 36 inches wide) or rock sawed (disturbed area will be 6 to 8 inches wide). Soil erosion resulting from plowing, trenching, and rock sawing will be limited due to: 1) the narrow width of actual disturbance; 2) the generally moderate reclamation potential of the soils to be disturbed; 3) the use of water diversion techniques (e.g., water bars) on steep areas that are trenched; and 4) the reseeding program to be implemented on disturbed soil areas.

WilTel's onsite representative will consult with the Authorized Officer on a site-specific basis prior to construction in areas with severe erosion potential to determine those measures necessary for the protection and

rehabilitation of such soils. These site-specific measures will be specified, as appropriate, in an amendment to this Plan. Erosion control and revegetation/reclamation measures for this project have been identified for the state of Wyoming and are discussed in Section 7.0.

6.2.4 WATER RESOURCES

The cable will be plowed or trenched into the bottom of the channels of 148 intermittent and 32 perennial streams and drainages. These streams and drainages, and the locations of where they will be crossed by the cable, are listed in Appendix D of the EA prepared for this project. All banks and streambeds will be immediately returned to original contours. Disturbed areas along stream banks will be protected by riprapping or other stream bank stabilization measures as approved by the Authorized Officer for BLM. All backfill in streambeds would consist of native fill. Conduit will be placed in trenched locations, and the fiber optic cable will then be pulled through the conduit. Construction activities within intermittent streams will be scheduled during low-flow periods to avoid potential impacts on fishery resources due to increased siltation.

6.2.5 VEGETATION

The disturbance to and protection/mitigation of vegetation within the cable right-of-way are addressed in Section 2.3.14 (Wetlands), and Section 7.0 (Stabilization and Rehabilitation).

Consultation with the U.S. Fish and Wildlife Service (USFWS) has confirmed that no federally listed threatened or endangered plants would be affected by the proposed project.

6.2.6 WILDLIFE AND THREATENED AND ENDANGERED SPECIES

Consultation with the U.S. Fish and Wildlife Service under Section 7(c) of the Endangered Species Act indicates that the cable right-of-way passes

through the historic ranges of the whooping crane, bald eagle, peregrine falcon, Wyoming toad, and black-footed ferret in Wyoming. A review of BLM and state records indicate that no construction activity will take place within 2 miles of known whooping crane, bald eagle, or peregrine falcon nesting sites or critical habitats.

Several miles of the cable will cross active prairie dog towns potentially capable of supporting black-footed ferrets. WilTel will avoid physical disturbance to prairie dog towns. Surveys to locate and map all towns within the ROW were conducted and although the existing ROW traverses a number of towns, no prairie burrows were located within the existing ROW. The BLM and USFWS have tentatively determined that maintaining a 25-foot buffer around active towns or burrows will limit disturbance to an acceptable level.

All powerlines constructed to serve the cable will be designed to be safe for perching raptors in accordance with Suggested Practices for Raptor Protection on Powerlines, (Raptor Research Foundation 1981).

The cable will pass within 2 miles of several known sage grouse strutting grounds and within 1 mile of nesting areas for golden eagles, ferruginous hawks, and prairie falcons. Impacts to nesting birds are expected to be insignificant because constructor crews will be moving at rates of up to 5 miles per day and will be spending less than one day in the vicinity of any one nest. In addition, construction will be started after most raptors have completed the nesting season. WilTel's onsite representative will have a list of cable sections lying within 1 mile of raptor nest sites and other sensitive wildlife areas. He will notify the Authorized Officer if, for any reason, work crews will be spending more than one day in any of these areas. When the BLM identifies conflicts between construction activity and raptor nesting, the Authorized Officer will make recommendations for adjustments in the timing and/or amount of activity on a site-specific basis.

WilTel and its contractors will comply with existing county, state, and federal laws involving the protection and preservation of feral horses, feral burros, raptors, and game and non-game wildlife species.

6.2.7 VISUAL RESOURCES

Six of the 15 regenerator stations to be installed along the cable ROW in Wyoming will be located on BLM-administered lands and, therefore, are subject to Visual Resource Management classification standards. The six stations are listed below along with the exterior colors.

Station Number	Milepost	Exterior
Edson 29	114.2	Tan Aggregate Finish
Riner Station 1	159.2	Tan Aggregate Finish
Tipton Station 1	196.2	Tan Aggregate Finish
Rocky Point 4	225.2	Tan Aggregate Finish
Little America 6	281.7	Tan Aggregate Finish
Union Station 8	321.2	Tan Aggregate Finish

6.2.8 SOCIOECONOMIC CONCERNS

Socioeconomic impacts resulting from construction and operation of the WilTel fiber optic cable in Wyoming will be negligible. Construction crews will be small and will have little or no effect on local services. The completed project will require a limited staff and will likely go unnoticed by local communities.

7.0 RIGHT-OF-WAY STABILIZATION AND REHABILITATION

7.1 SOILS AND STABILIZATION

The following erosion control practices will be implemented, where necessary, as determined by the Authorized Officer in Wyoming: a) water barring; b) ground matting; c) seeding; d) mulching; and e) rip-rapping. Water bars and erosion plugs will be utilized in any areas where the grade exceeds 2 to 4 percent for a distance of 200 feet, 4 to 6 percent for a distance of 100 feet, or 6 to 25 percent for a distance of 50 feet. Standard spacing for water bars will be 75 feet, unless otherwise agreed to and determined by field conditions. On slopes greater than 25 percent, Wiltel will use water bars (regardless of slope length) and one of the above mentioned erosion control practices, such as mulching or matting, to further stabilize soils. The same standards will apply to spacing of erosion plugs. All areas of the ROW, except those that are unvegetated prior to cable construction and where the annual precipitation is less than 10 inches, will be re-seeded in a proper seedbed by the broadcast method. All disturbed areas will be recontoured to reflect the existing terrain. The use of heavy equipment on clayey soils will be limited to periods when the soil is dry or frozen and all disturbed streams and drainages will be restored to their original contours.

7.2 DISPOSAL OF TREES, STUMPS, AND BRUSH CUT ON THE RIGHT-OF-WAY

The majority of the proposed WilTel fiber optic cable ROW follows existing disturbed pipeline ROWs, and it is expected that minimal cutting of woody vegetation will be required during construction and installation of the cable system in Wyoming. All shrubs and trees that are removed will be lopped and scattered on the right-of-way.

7.3 SEEDING SPECIFICATIONS

7.3.1 SEED MIXTURE

The following seed mixture has been established for all disturbed soils in the Rock Springs and Rawlins districts:

Seed Type

Thickspike Wheatgrass
Western Wheatgrass
Streambank Wheatgrass
Gardeners (Nuttall) Saltbrush
Crested Wheatgrass

7.3.2 RATE OF SEED APPLICATION (BROADCAST METHOD)

Seed Type	Rate (lbs/acre/PLS) Rock Springs	Rate (lbs/acre/PLS) Rawlins
Thickspike Wheatgrass	4	4
Western Wheatgrass	4	4
Streambank Wheatgrass	4	4
Gardeners (Nuttall) Saltbrush	4	4
Crested Wheatgrass	4	4

7.3.3 METHOD OF SEED APPLICATION

In general, all disturbed areas will be seeded with the mixture listed in Section 7.3.1. Disturbed areas with less than 10 inches of precipitation will not be seeded unless there is naturally occurring grass in areas adjacent to the ROW. Seed will be broadcast at the rates specified above. Seeded areas shall be raked or chained to cover the seed. Seeding activities will occur by November 30, 1986, and will be repeated until a satisfactory stand has been established as determined by

the Authorized Officer. Evaluation of growth will not be made before completion of the first growing season after seeding occurs. The Authorized Officer will be notified seven (7) days prior to seeding in order to schedule seeding activity inspections.

7.3.4 SEEDING SCHEDULE

Seeding will be done by a ROW cleanup crew that will follow the plowing operation by no more than 1 week in Wyoming and will be completed according to BLM revegetation policies.

7.3.5 USE OF FERTILIZER

Fertilization will not be part of the reclamation effort unless required by the Authorized Officer.

8.0
OPERATION AND MAINTENANCE OF THE FACILITIES

8.1 INSPECTION AND MAINTENANCE

The regenerator stations will be visited routinely by WilTel employees to inspect the internal equipment. The cable itself will not be inspected unless a malfunction occurs. Maintenance will occur on an as-needed basis, and will involve either the repair or replacement of equipment within the regenerator stations or the splicing of a break in the cable.

8.2 LONG-TERM ACCESS TO AND ALONG THE RIGHT-OF-WAY

Permanent access to the cable ROW is available via existing public and/or private roads. No new roads will be constructed or maintained specifically for long-term access.

9.0
TERMINATION AND RESTORATION

The expected lifetime of the fiber optic cable is 75 years. Equipment at the regenerator, junction, and terminal stations will have a shorter lifetime, particularly because of rapidly advancing technology, but can be easily replaced. At the end of cable service life, the cable itself will be abandoned in the ground. Above-ground facilities such as stations will be removed, the sites will be restored and revegetated, and debris will be disposed of in an approved manner.

SECTION 10.0
FIGURES

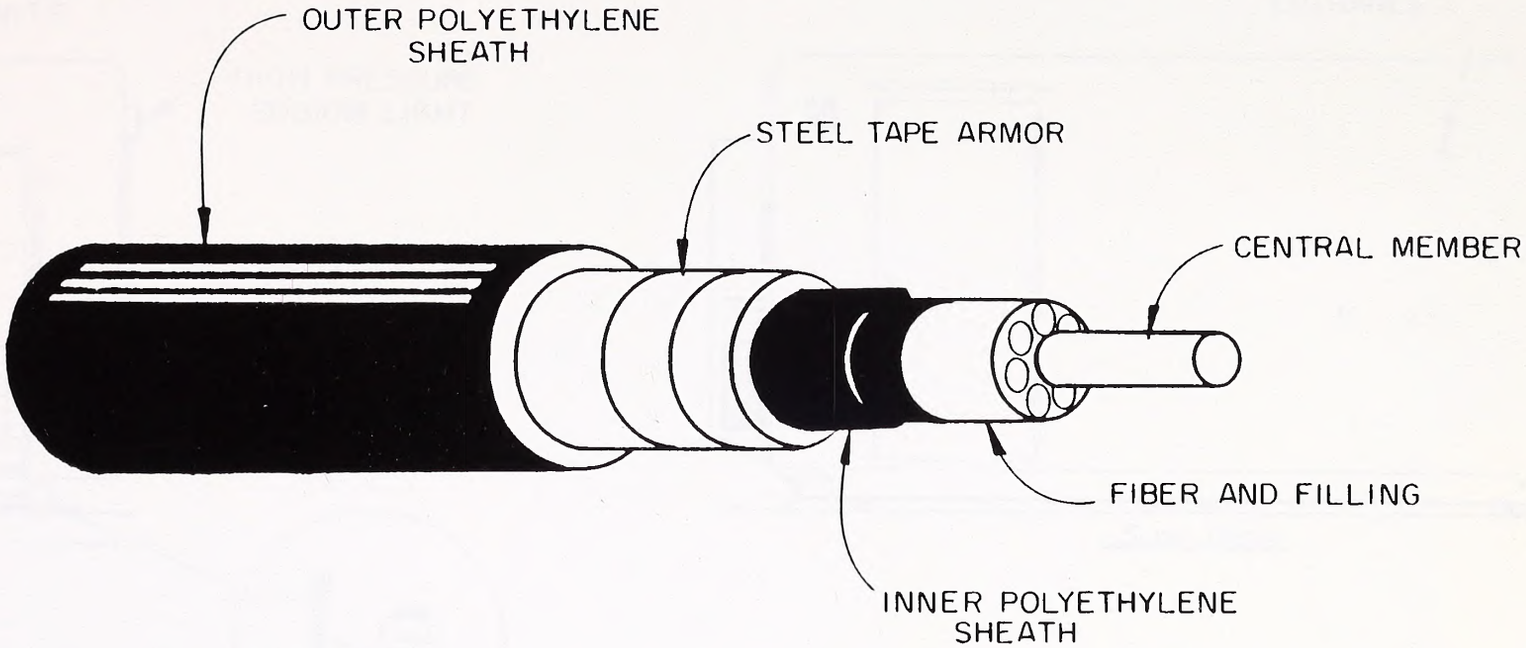

TYPICAL FIBER OPTIC CABLE

Woodward-Clyde Consultants

Figure 1.

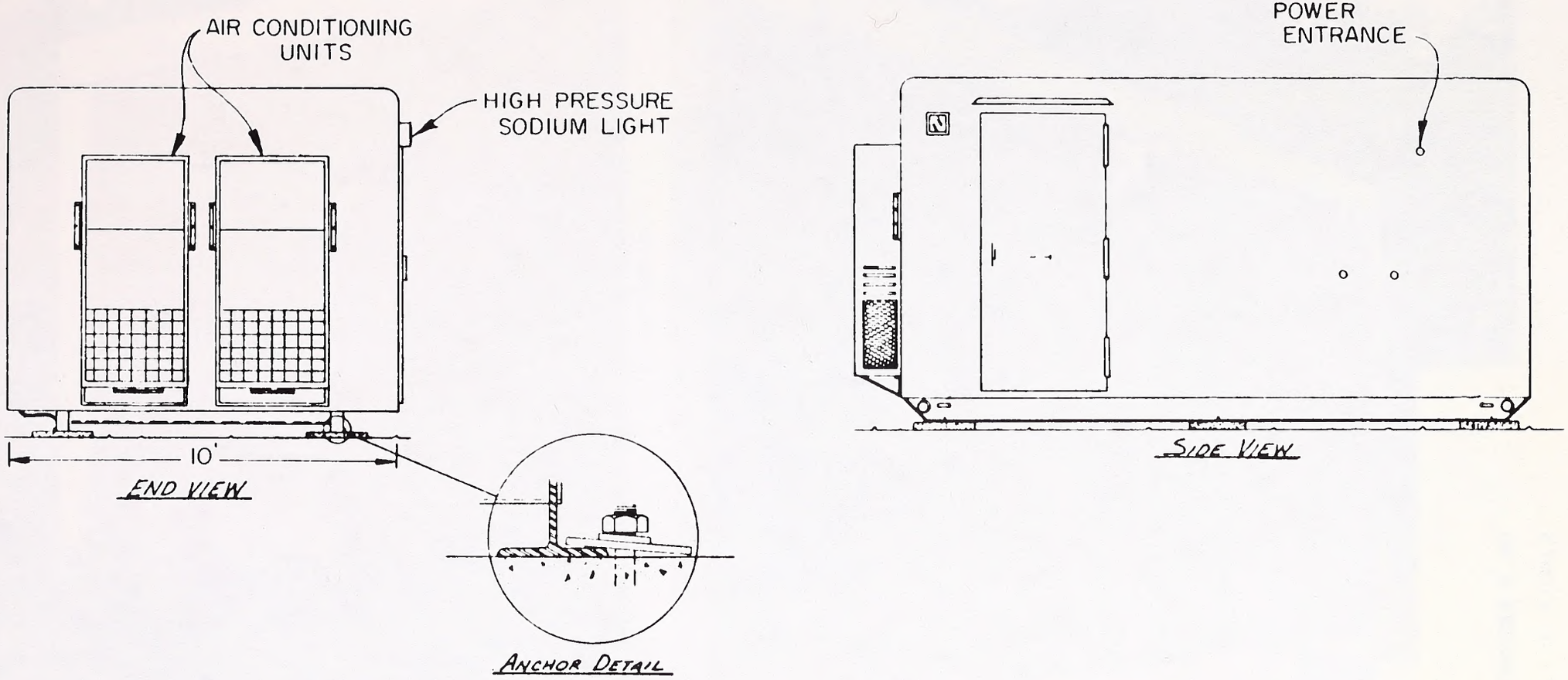

TYPICAL REGENERATOR STATION BUILDING

Woodward-Clyde Consultants

Figure 2.

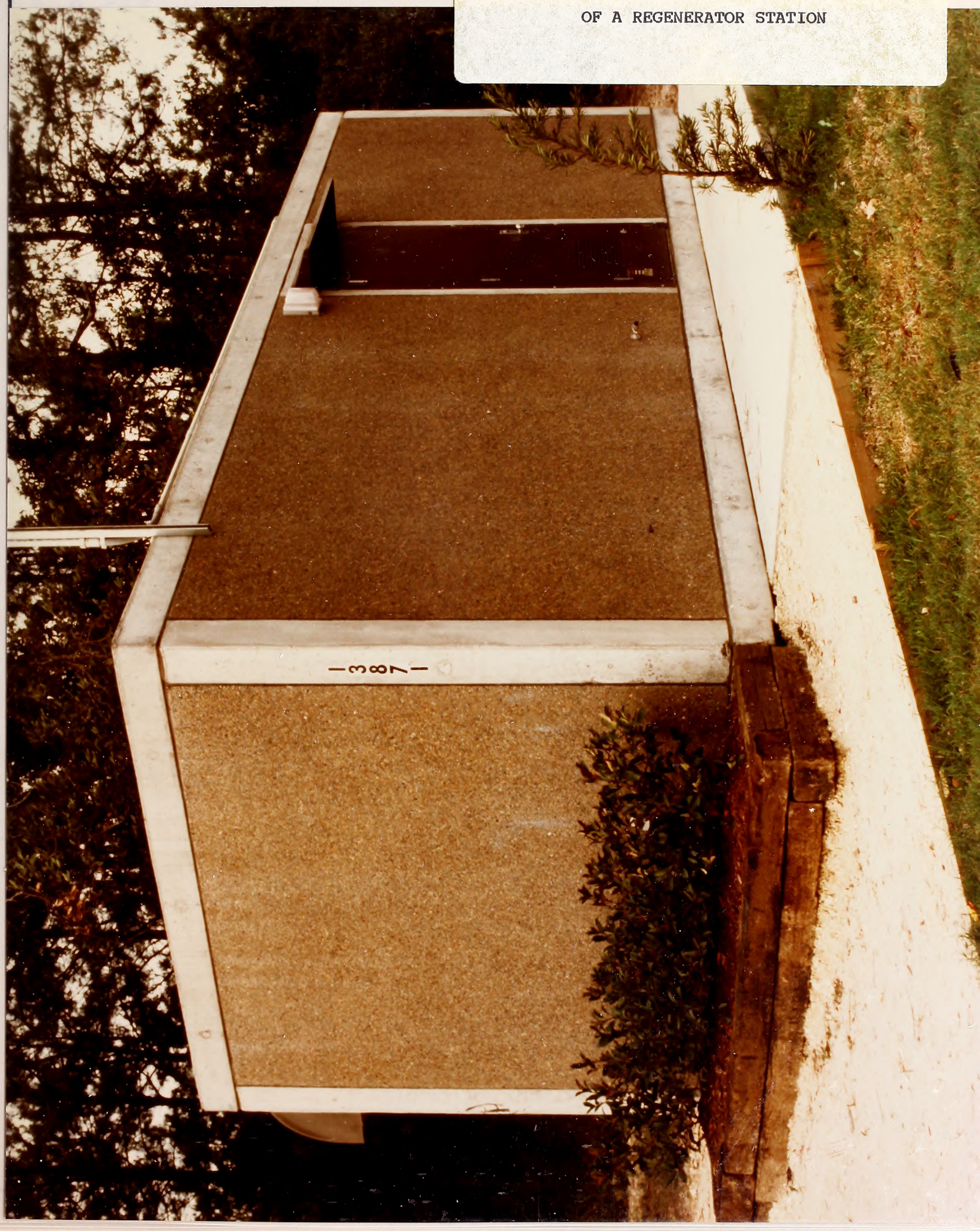

Figure 3. EXTERIOR VIEW OF A REGENERATOR STATION

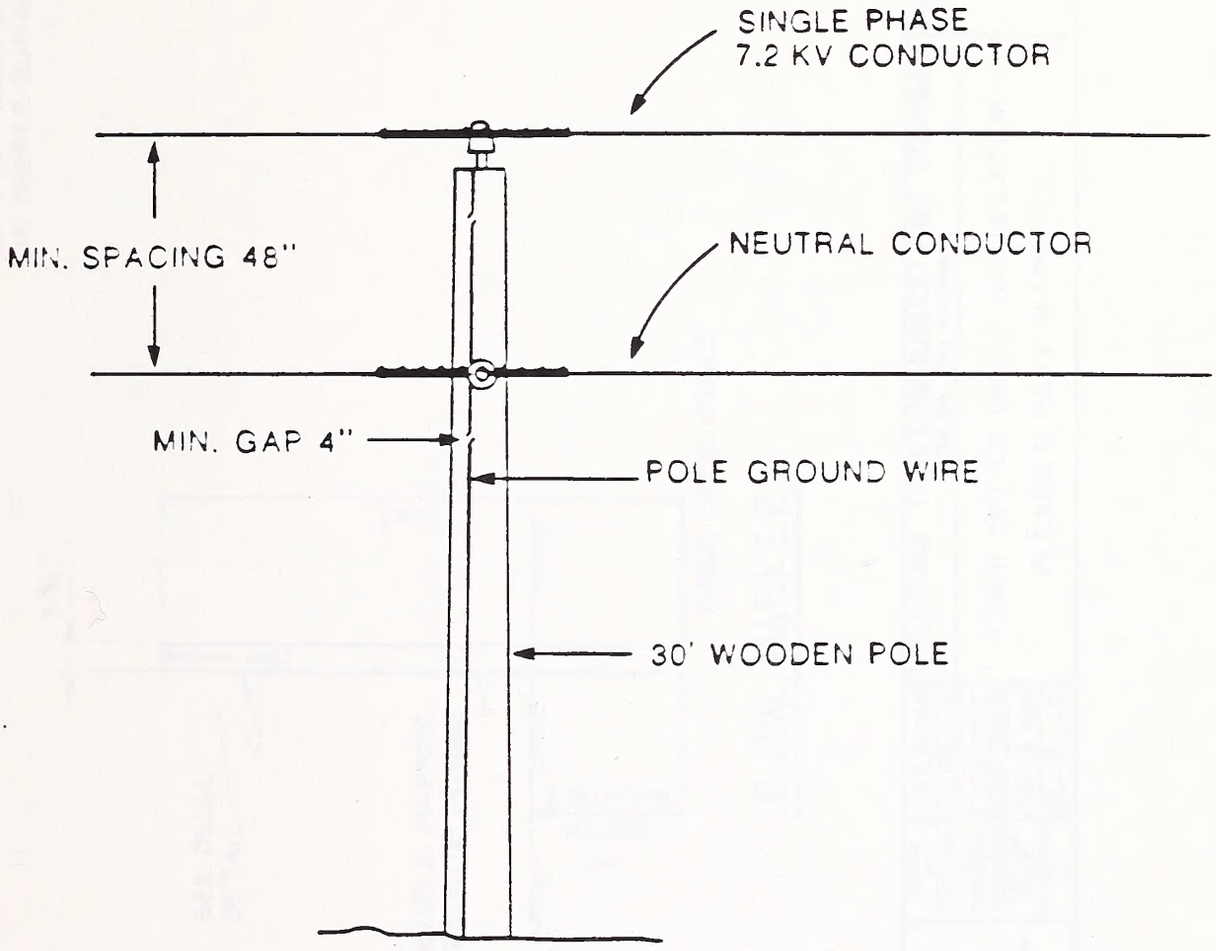

Note: Insulator designs and conductor spacings may vary by local utility. All lines will meet raptor protection standards set forth in Olendorff et al., 1981.

Woodward-Clyde Consultants

TYPICAL POWERLINE POLE CONFIGURATION

Figure 4.

NOTES;

1. MARKERS TO BE INSTALLED FACING DIRECTION OF CABLE ROUTE.
2. MINIMUM OF TWO MARKERS REQUIRED PER CROSSING.
3. APPROXIMATE INSERTION DEPTH OF 18". MAY VARY WITH SOIL CONDITIONS (I.E. DEEPER BURIAL IN SANDY SOILS)

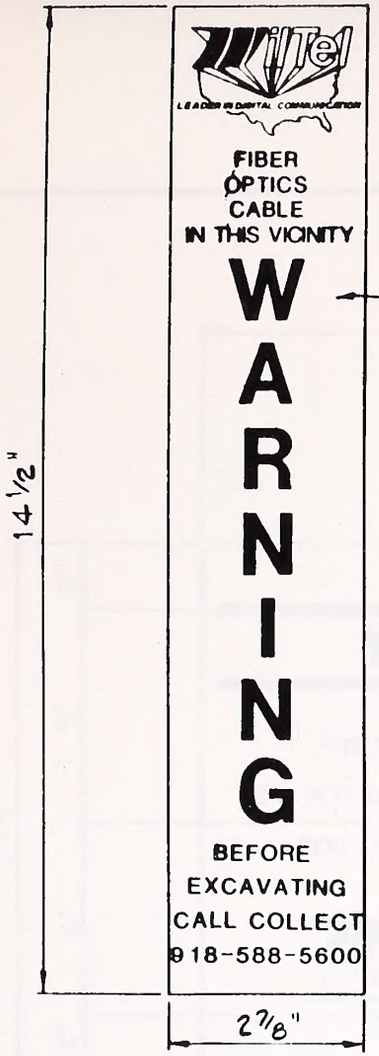

NOTE;
BLACK LETTERING ON ORANGE BACKGROUND

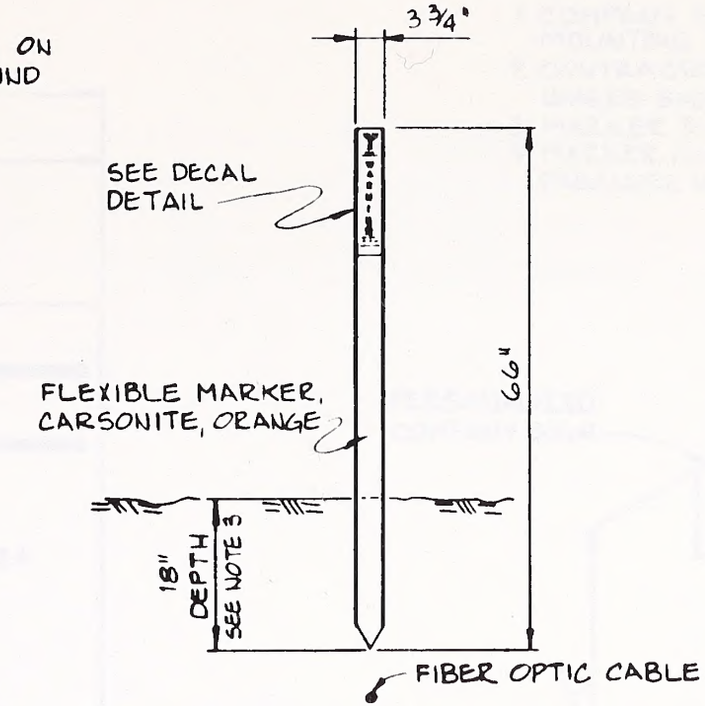

R.O.W. MARKER

ISSUE NUMBER	DRAWN BY	DATE REVISED	CHECKED BY	PROJECT ENGINEER	SECTION HEAD	APPROVED BY
1	ISSUED FOR STANDARD					
	J.O.E.	4-30-86	W.H.D.	WHD	RAS	JMS

LEADER IN DIGITAL COMMUNICATIONS

DRAWN BY	J.O.E.	4-30-86
CHECKED BY	WHD	5-5-86
PROJECT ENGINEER	WHD	5/6/86
SECTION HEAD	RAS	5-9-86
APPROVED BY	[illegible]	6-10-86

WILLIAMS TELECOMMUNICATIONS COMPANY
TULSA, OKLAHOMA

FIBER OPTICS CABLE INSTALLATION-
FLEXIBLE POST MARKERS

SCALE	NONE	AFE	0480

Figure 5.

NOTES;

1. COMPANY SHALL PROVIDE SIGNS, POSTS AND MOUNTING MATERIALS
2. CONTRACTOR TO ASSEMBLE AND INSTALL MARKERS WHERE SHOWN ON ALIGNMENT SHEETS.
3. MARKER TO BE PLACED OVER CABLE.
4. MARKER SHALL BE FACED TO BE READ FROM ROAD AND PARALLEL WITH ROAD R-O-W LINES.

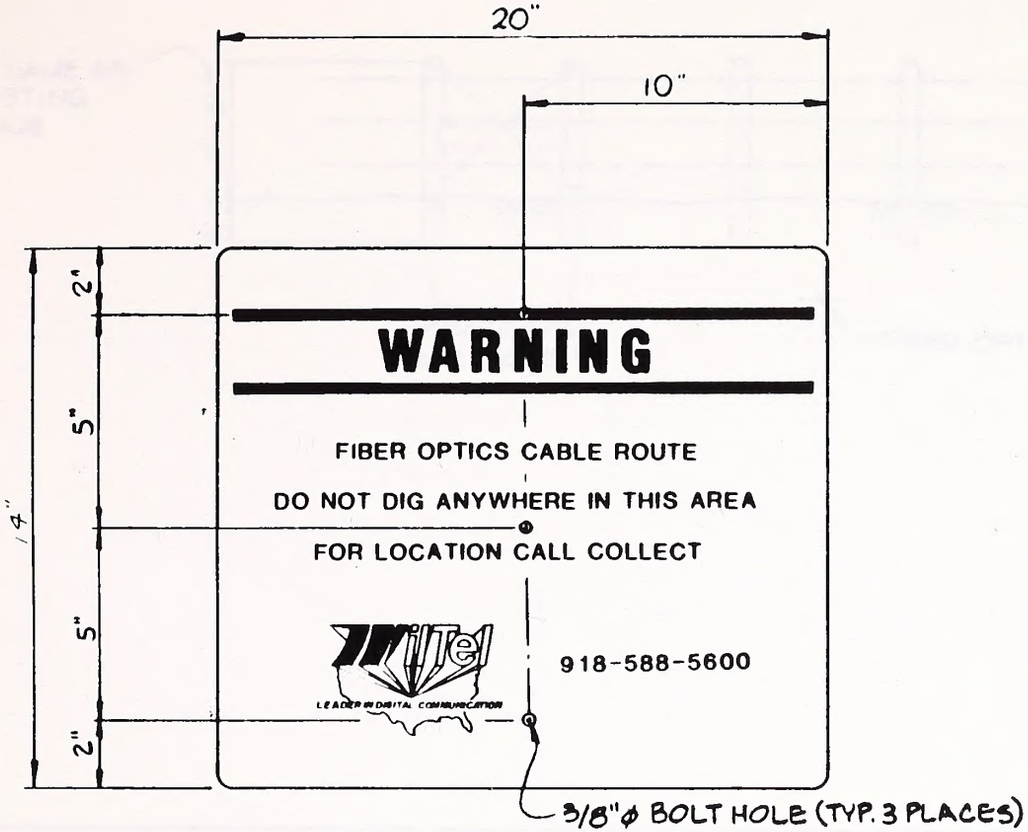

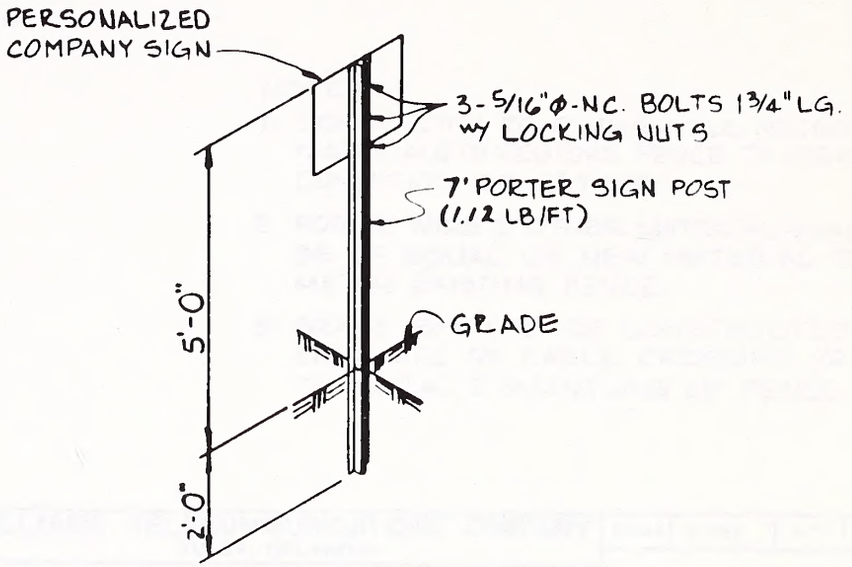

GROUND MARKER AND POST DETAIL

ISSUE NUMBER	DRAWN BY	DATE REVISED	CHECKED BY	PROJECT ENGINEER	SECTION HEAD	APPROVED BY
1	ISSUED FOR STANDARD TLW	5-2-86	WHD	WHD	RAS	MJ

WilTel LEADER IN DIGITAL COMMUNICATIONS

DRAWN BY	TLW	5-2-86
CHECKED BY	WHD	5-5-86
PROJECT ENGINEER	WHD	6/6/86
SECTION HEAD	RAS	6-9-86
APPROVED BY	[illegible]	6-10-86

WILLIAMS TELECOMMUNICATIONS COMPANY
TULSA, OKLAHOMA

FIBER OPTICS CABLE INSTALLATION
POST MOUNTED SIGN MARKERS

SCALE	NONE	AFE.	0480

Figure 6.

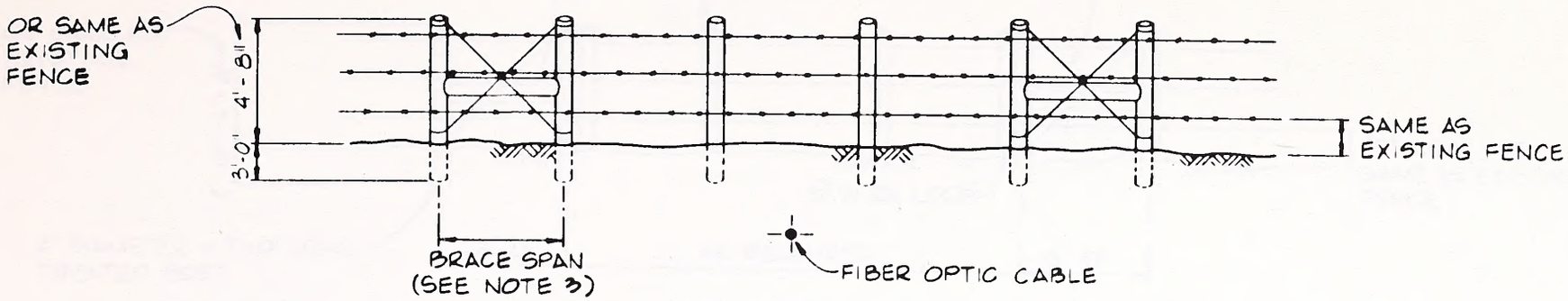

NOTES

1. CONTRACTOR TO FURNISH ALL NECESSARY MATERIALS TO RESTORE FENCE TO ORIGINAL CONDITION OR BETTER
2. POSTS, WIRE & OTHER MATERIAL SHALL BE OF EQUAL OR NEW MATERIAL TO MATCH EXISTING FENCE.
3. BRACE SPAN TO BE CONSTRUCTED ON EACH SIDE OF CABLE CROSSING PRIOR TO INITIAL DISMANTLING OF FENCE.

ISSUE NUMBER	DRAWN BY	DATE REVISED	CHECKED BY	PROJECT ENGINEER	SECTION HEAD	APPROVED BY
1	ISSUED FOR STANDARD					
	SAJ	4-30-86	W.H.D.	[illegible]	[illegible]	[illegible]

LEADER IN DIGITAL COMMUNICATIONS

DRAWN BY	S.A.J.	4-30-86
CHECKED BY	W.H.D.	5-5-86
PROJECT ENGINEER	[illegible]	6/6/86
SECTION HEAD	[illegible]	[illegible]
APPROVED BY	[illegible]	6-10-86

WILLIAMS TELECOMMUNICATIONS COMPANY
TULSA, OKLAHOMA

FENCE RESTORATION

SCALE	NONE	AFE	0480

Figure 7.

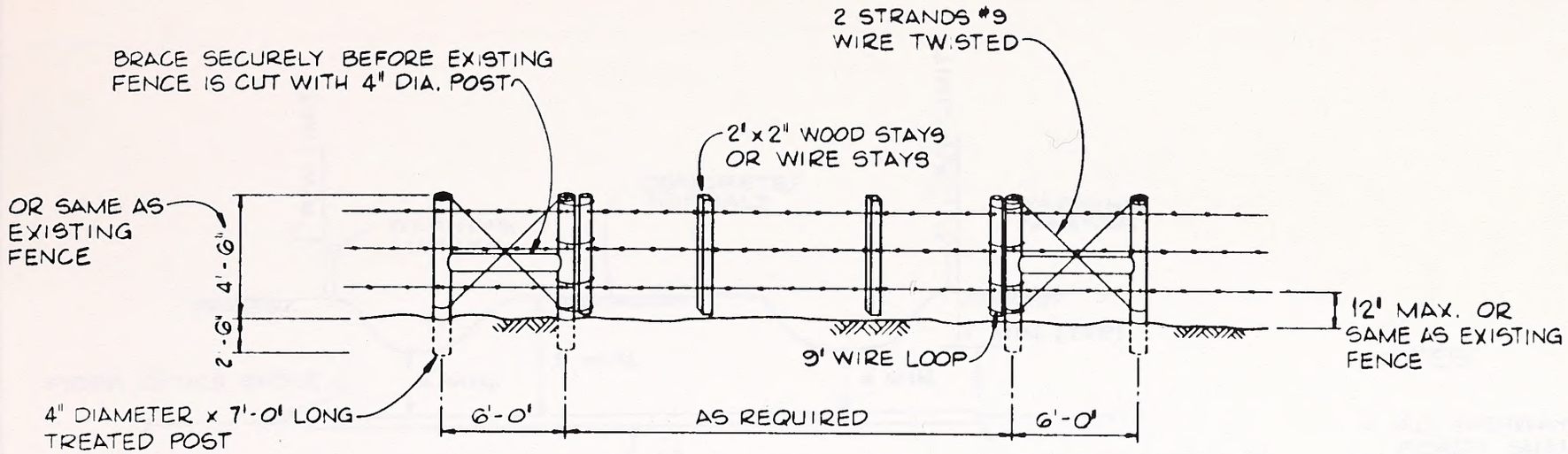

NOTES

1. CONTRACTOR SHALL FURNISH ALL MATERIAL TO BUILD TEMPORARY FENCE GATE TO MATCH EXIST. FENCE.

2. CONTRACTOR SHALL REBUILD FENCES TO ORIGINAL CONDITION AND REMOVE ALL TEMPORARY MATERIALS.

ISSUE NUMBER	DRAWN BY	DATE REVISED	CHECKED BY	PROJECT ENGINEER	SECTION HEAD	APPROVED BY
1	ISSUED FOR STANDARD					
	S.A.J.	4-30-86	W.H.D.	[illegible]	[illegible]	[illegible]

LEADER IN DIGITAL COMMUNICATIONS

DRAWN BY	S.A.J.	4-30-86
CHECKED BY	W.H.R.	5-5-86
PROJECT ENGINEER	[illegible]	4/6/86
SECTION HEAD	PAS	6-9-86
APPROVED BY	[illegible]	6-10-86

WILLIAMS TELECOMMUNICATIONS COMPANY
TULSA, OKLAHOMA

TEMPORARY FENCE GATES

SCALE	NONE	AFE	0480

Figure 8.

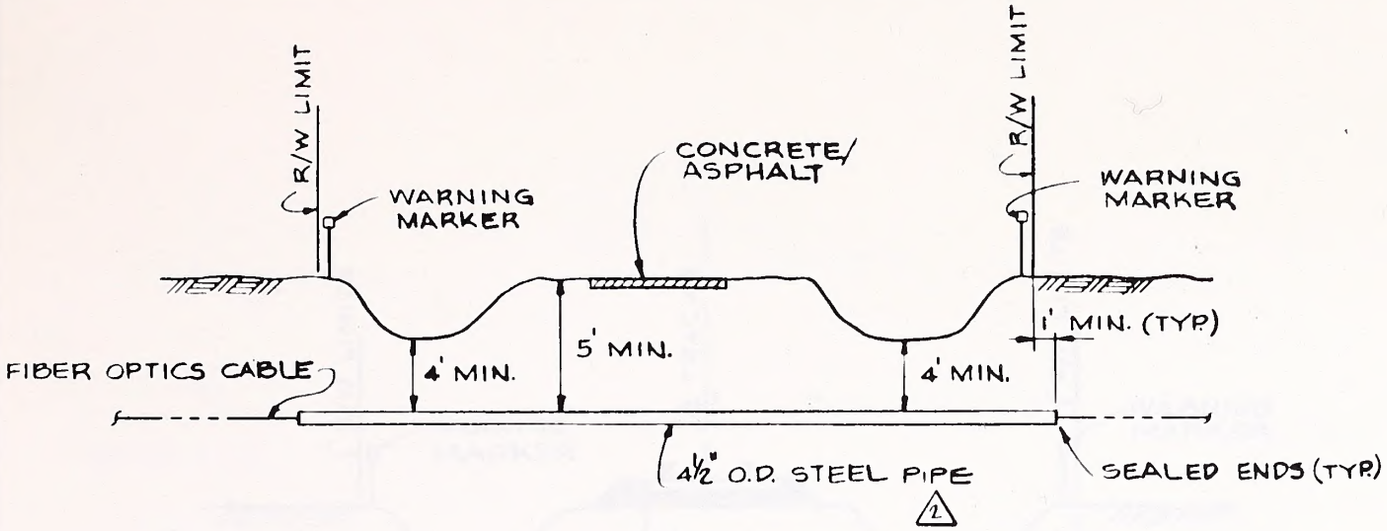

ELEVATION VIEW

NOTES:

1. ALL HIGHWAY AND HARD SURFACE ROADS SHALL BE BORED.
2. INSTALL PIPE WITH A 4 FT. MINIMUM COVER UNLESS OTHERWISE SPECIFIED ON DRAWINGS AND/OR PERMIT.

ISSUE NUMBER	DRAWN BY	DATE REVISED	CHECKED BY	PROJECT ENGINEER	SECTION HEAD	APPROVED BY
2	REVISED AS NOTED RJM	6-6-86	WLB	WHD	RAS	JFS
1	ISSUED FOR STANDARD J.F.S.	4-30-86	W.H.D.	WHD		JFS

LEADER IN DIGITAL COMMUNICATIONS

DRAWN BY	J.F.S.	4-30-86
CHECKED BY	W.H.D.	5-5-86
PROJECT ENGINEER	WHD	4/6/86
SECTION HEAD	RAS	6-9-86
APPROVED BY	JFS	6-10-86

WILLIAMS TELECOMMUNICATIONS COMPANY
TULSA, OKLAHOMA

FIBER OPTICS CABLES INSTALLATION
HIGHWAY AND HARD SURFACE CROSSINGS

SCALE	NONE	AFE	0480

Figure 9.

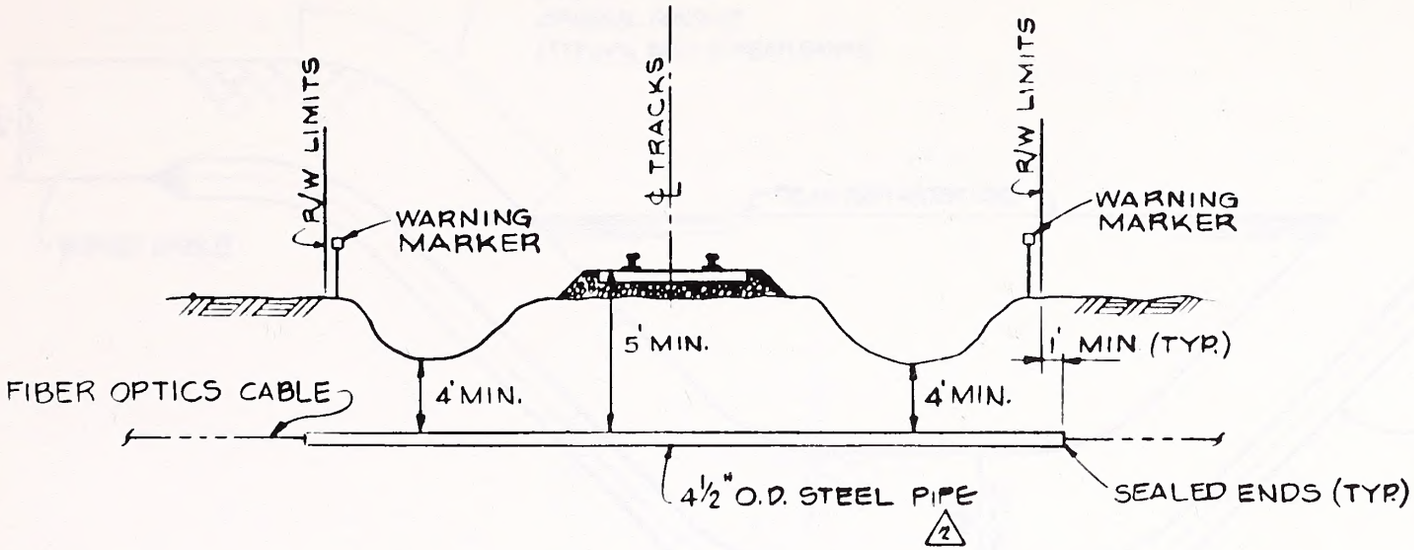

ELEVATION VIEW

NOTES:

1. FOR LOCATION & LENGTH OF PIPE CROSSING SEE THE PRELIMINARY ALIGNMENT SHEETS.
2. CROSSING INSTALLATION SHALL BE IN ACCORDANCE WITH APPLICABLE PERMIT.
3. WHERE, IN THE OPINION OF THE RAILROAD COMPANY'S CHIEF ENGINEER, DRAINAGE DITCHES OR OTHER CONDITIONS REQUIRE THE CASED CROSSING TO BE BURIED TO A GREATER DEPTH, IT SHALL BE SO INSTALLED.

ISSUE NUMBER	DRAWN BY	DATE REVISED	CHECKED BY	PROJECT ENGINEER	SECTION HEAD	APPROVED BY
2	REVISED AS NOTED RJM	6-6-86	WLP	WHD	RAS	[illegible]
1	ISSUED FOR STANDARD J.F.S.	4-30-86	W.H.D.	WHD		

LEADER IN DIGITAL COMMUNICATIONS

DRAWN BY	J.F.S.	4-30-86
CHECKED BY	W.H.D.	5-5-86
PROJECT ENGINEER	[illegible]	6/6/86
SECTION HEAD	RAS	6-9-86
APPROVED BY	[illegible]	6-10-86

WILLIAMS TELECOMMUNICATIONS COMPANY
TULSA, OKLAHOMA

FIBER OPTICS CABLES INSTALLATION
RAILROAD CROSSING

SCALE	NONE	AFE	0480

Figure 10.

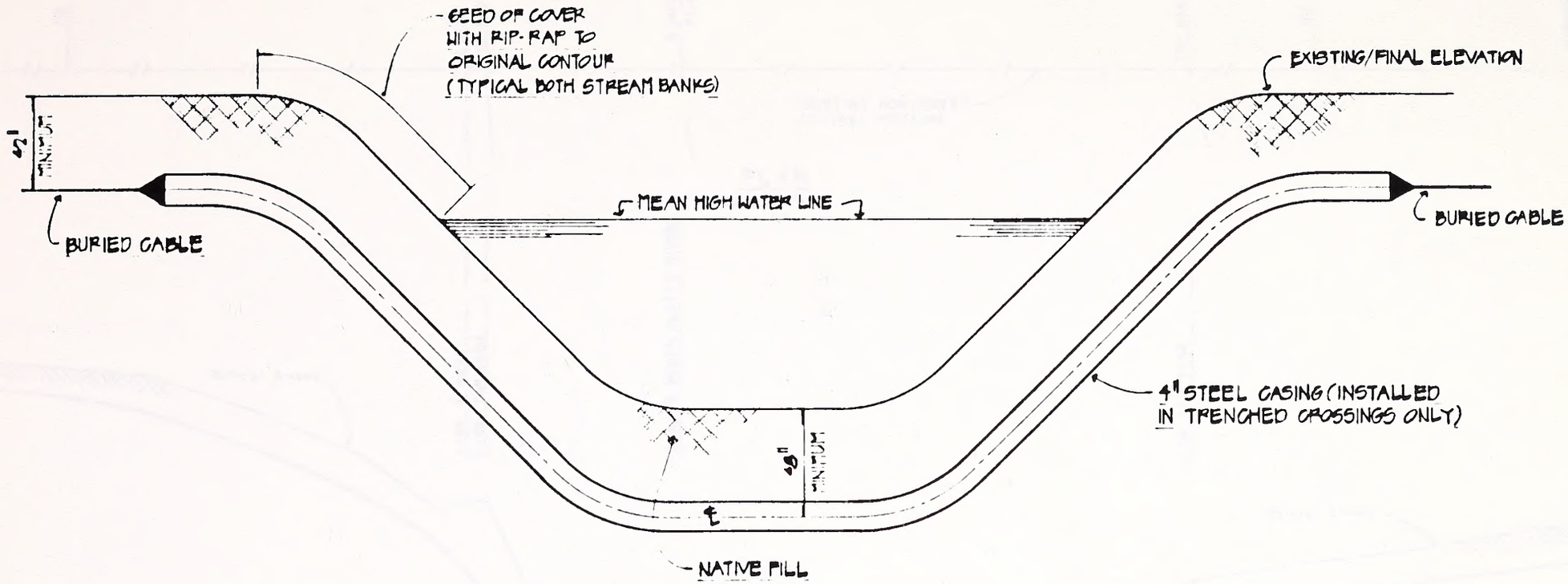

TYPICAL CROSS SECTION OF
STREAM OR DRAINAGE CROSSING
(TRENCHED OR PLOWED)

Woodward-Clyde Consultants

Figure 11.

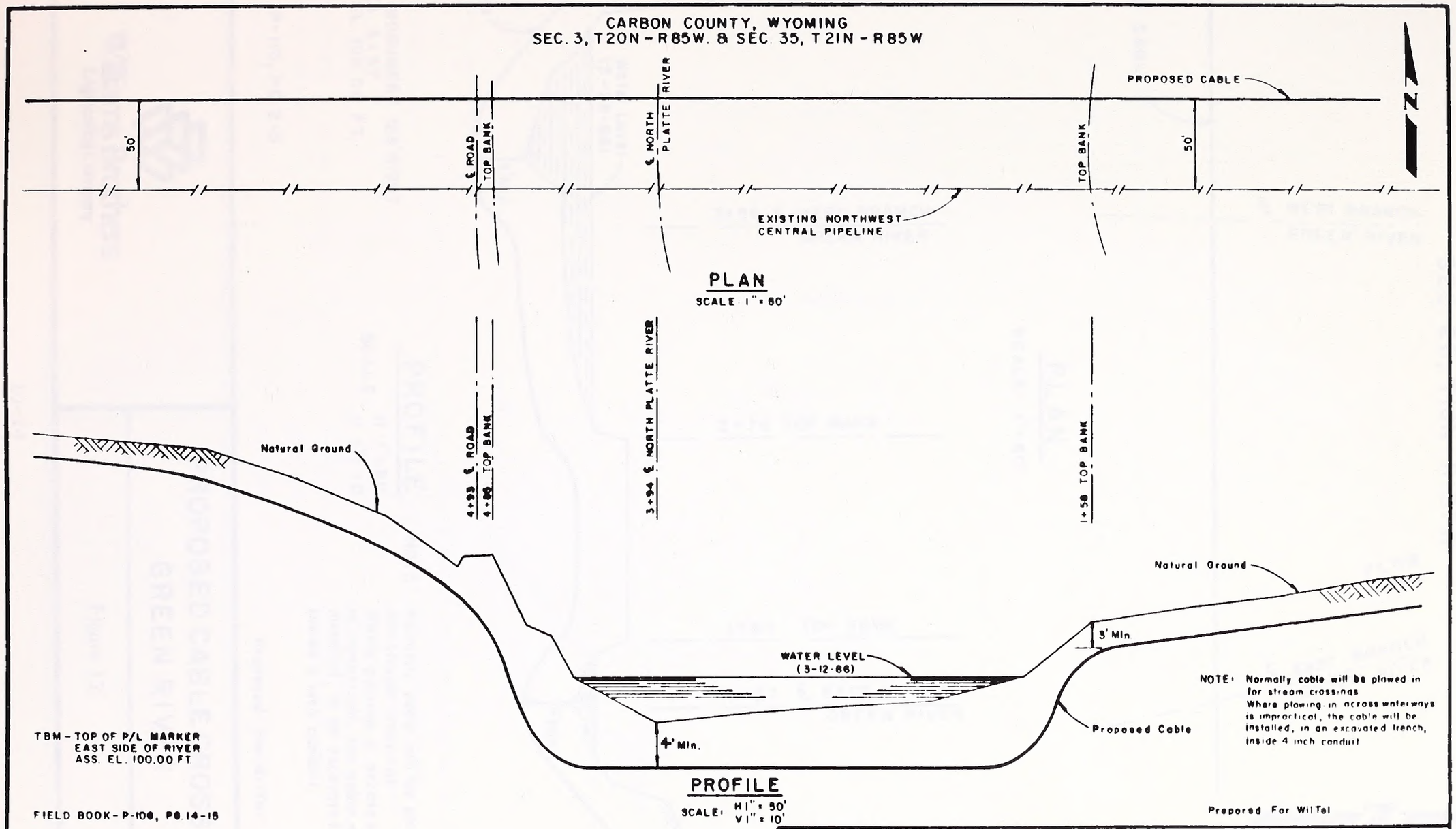
CARBON COUNTY, WYOMING
SEC. 3, T20N - R85W. & SEC. 35, T21N - R85W
PROPOSED CABLE
50'
℄ ROAD
TOP BANK
℄ NORTH PLATTE RIVER
TOP BANK
50'
EXISTING NORTHWEST CENTRAL PIPELINE
PLAN
SCALE: 1" = 80'
4+93 ℄ ROAD
4+86 TOP BANK
3+94 ℄ NORTH PLATTE RIVER
1+58 TOP BANK
Natural Ground
Natural Ground
3' Min.
WATER LEVEL (3-12-86)
4' Min.
Proposed Cable
NOTE: Normally cable will be plowed in for stream crossings. Where plowing in across waterways is impractical, the cable will be installed, in an excavated trench, inside 4 inch conduit
TBM - TOP OF P/L MARKER EAST SIDE OF RIVER ASS. EL. 100.00 FT.
FIELD BOOK - P-100, PG. 14-15
PROFILE
SCALE: H 1" = 50' V 1" = 10'
Prepared For WilTel
Williams Brothers Engineering Company
PROPOSED CABLE CROSSING NORTH PLATTE RIVER
Figure 12.

SWEETWATER COUNTY, WYOMING
SEC. 26, T18N-R107W

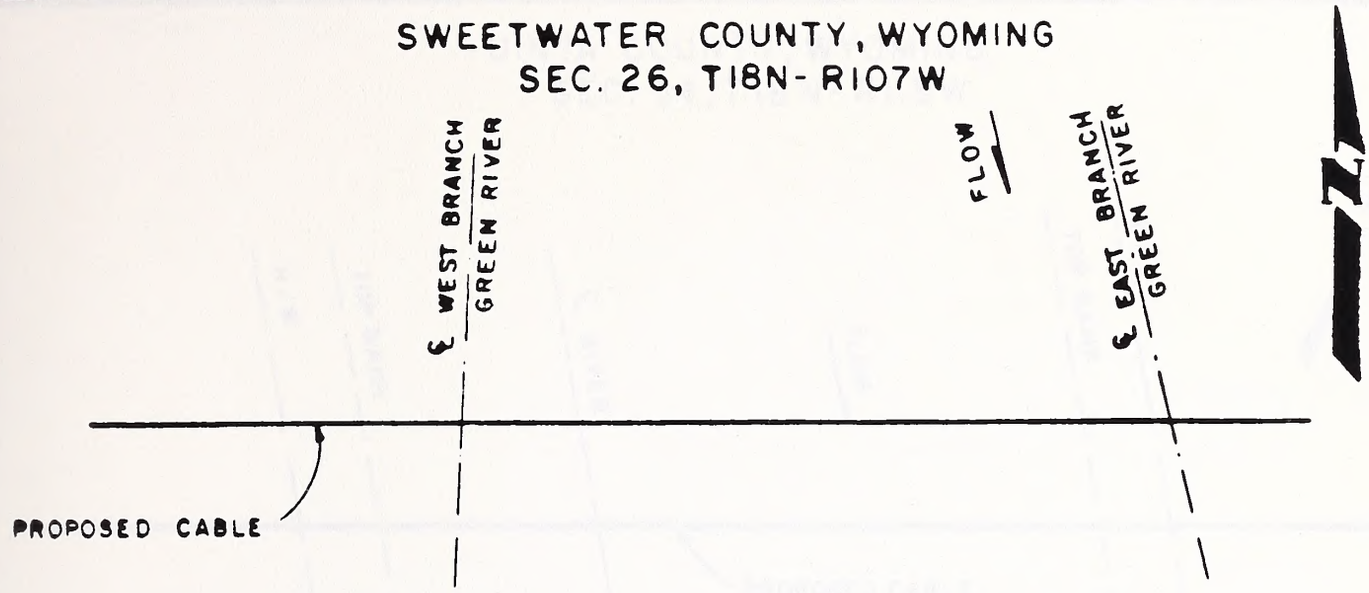

PLAN

SCALE: 1" = 80'

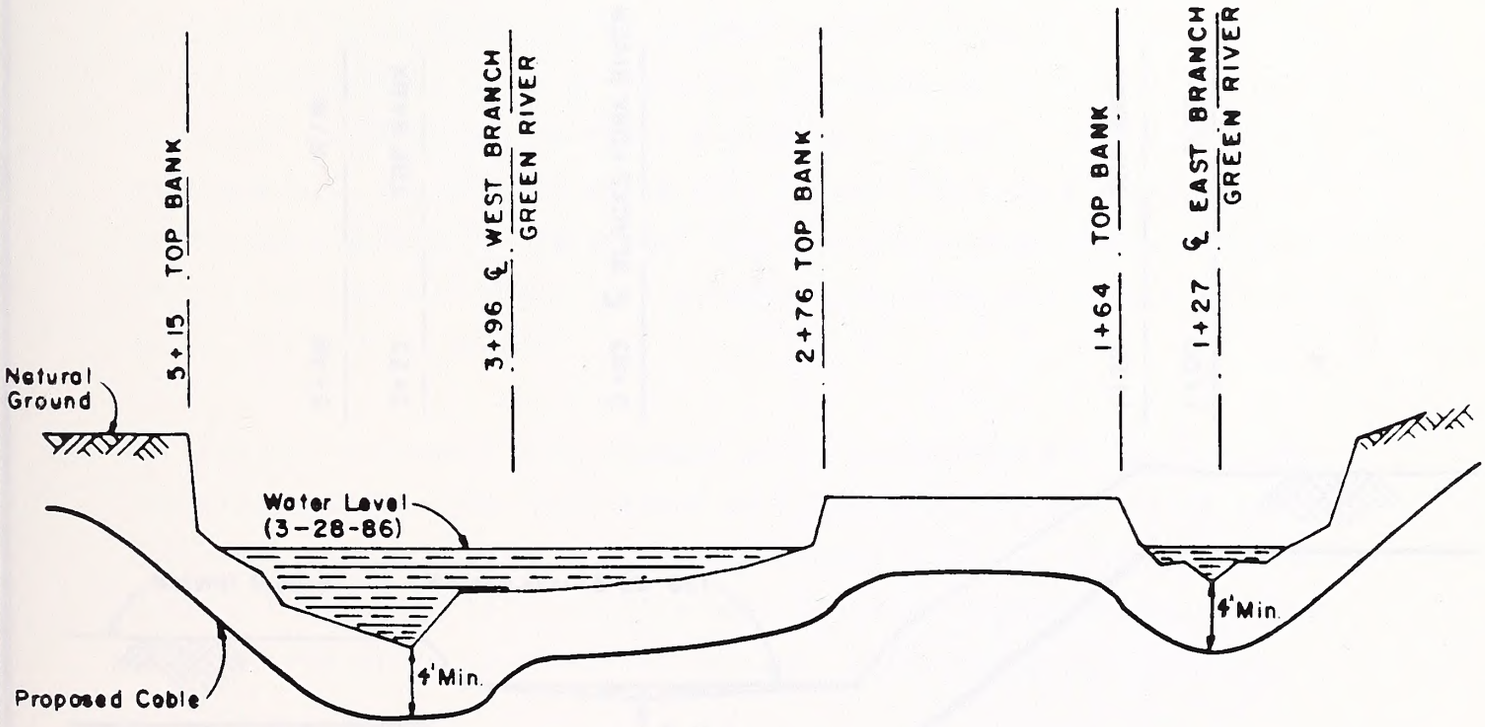

PROFILE

SCALE: H 1" = 80'
V 1" = 10'

TBM - USGS MONUMENT 125' RIGHT OF STA. 5+57 ASS. EL. 100.00 FT.

FIELD BOOK P-110, PG. 2-3

NOTE: Normally cable will be plowed-in for stream crossings
Where plowing-in across waterways is impractical, the cable will be installed, in an excavated trench, inside 4 inch conduit.

Prepared For WilTel

Williams Brothers Engineering Company

PROPOSED CABLE CROSSING GREEN RIVER

Figure 13.

DES-F-A1001

UINTA COUNTY, WYOMING
SEC. 34, T18N-R113W

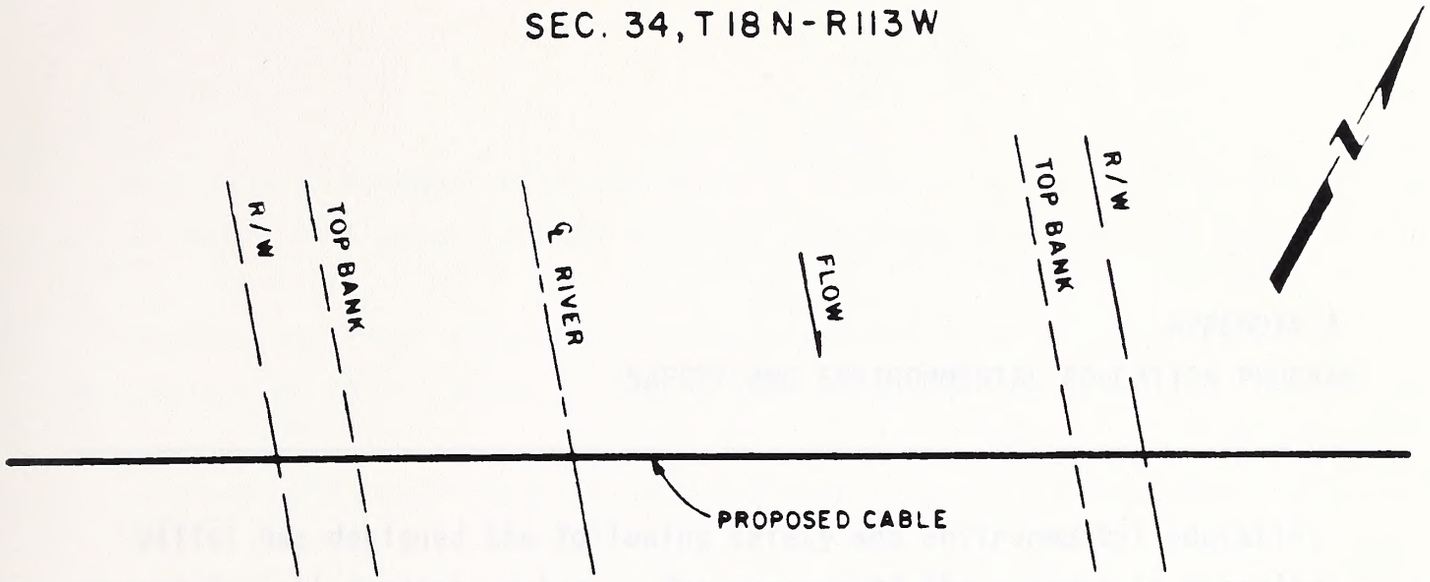

PLAN

SCALE: 1" = 60'

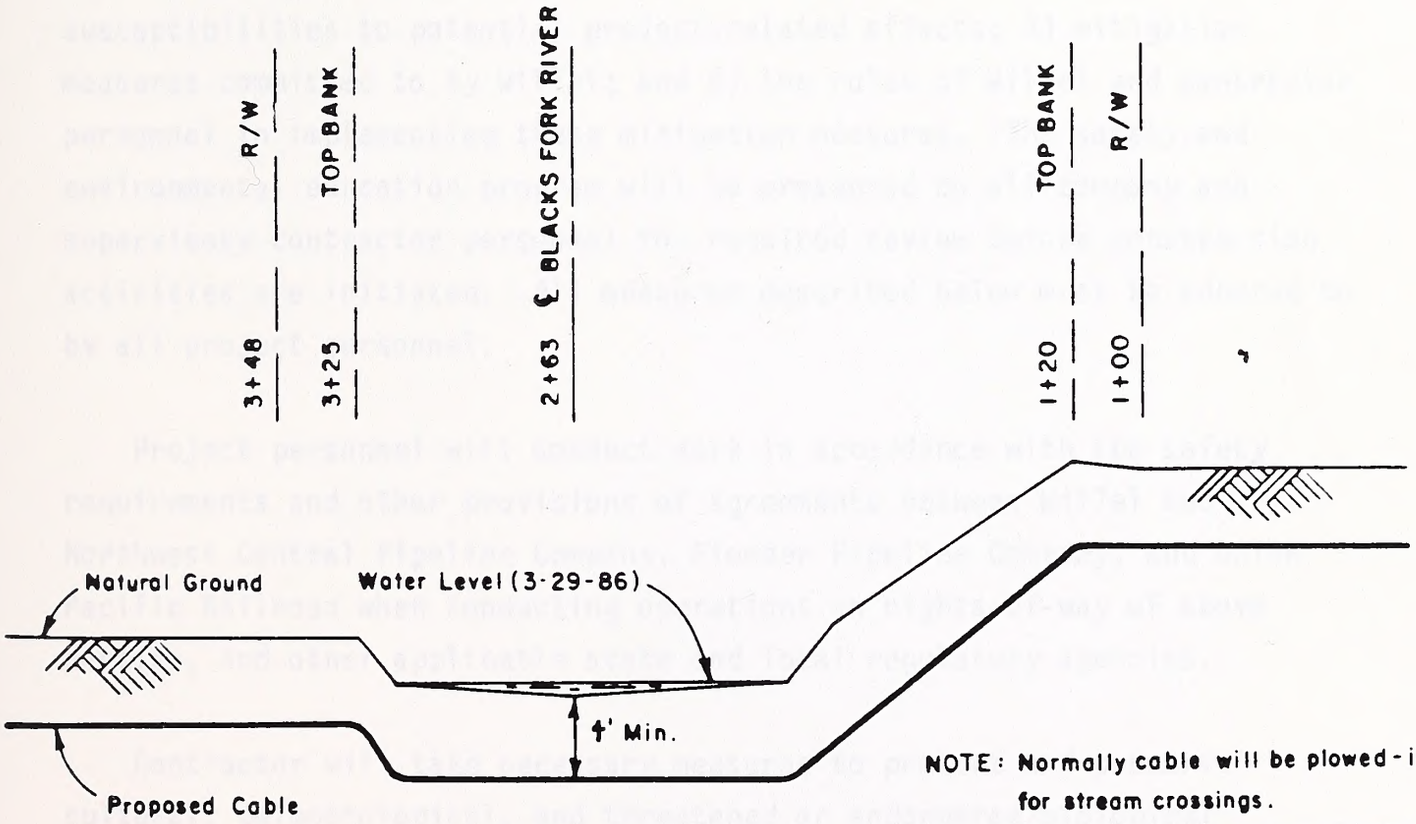

NOTE: Normally cable will be plowed-in for stream crossings. Where plowing-in across waterways is impractical, the cable will be installed, in an excavated trench, inside 4 inch conduit.

PROFILE

TBM TOP OF BANK AT HUB LOCATION
ASS. EL. 100.00'

SCALE: H 1" = 60'
V 1" = 20'

FIELD BOOK P-114, PG. 23

Prepared For WilTel

Williams Brothers Engineering Company

PROPOSED CABLE CROSSING
BLACKS FORK RIVER

Figure 14.

DES-F-A1001

APPENDIX A
SAFETY AND ENVIRONMENTAL EDUCATION PROGRAM

WilTel has designed the following safety and environmental education program for all project workers. The purpose of the program is describe: 1) general safety requirements for project employees; 2) important environmental resources present in the project area and their susceptibilities to potential project-related effects; 3) mitigation measures committed to by WilTel; and 4) the roles of WilTel and contractor personnel in implementing these mitigation measures. The safety and environmental education program will be presented to all company and supervisory contractor personnel for required review before construction activities are initiated. All measures described below must be adhered to by all project personnel.

Project personnel will conduct work in accordance with the safety requirements and other provisions of agreements between WilTel and Northwest Central Pipeline Company, Pioneer Pipeline Company, and Union Pacific Railroad when conducting operations on rights-of-way of above parties, and other applicable state and local regulatory agencies.

Contractor will take necessary measures to protect and preserve cultural, paleontological, and threatened or endangered biological resources. All project personnel are prohibited from collecting or otherwise willfully disturbing such resources.

Project personnel are forbidden to use public campgrounds or public lands for personal living arrangements during course of the project. Employees with campers must use commercial camping facilities except for days off.

Contractor employees will not possess firearms, alcoholic beverages, or drugs (other than prescribed by personal physician) while on work premises.

Project personnel will restrict their activities to right-of-way or work sites and will respect private property ownership.

Littering of right-of-way or other property is strictly prohibited.

Hunting of game from right-of-way or other work sites is strictly prohibited. Hunter safety vests will be worn by all personnel during hunting season. Survey monuments will be protected and, if destroyed, replaced in accordance with BLM regulations.

Any project personnel found violating any of the above prohibitions, or in any way willfully causing damage to or interfering with any prescribed mitigation measure, will be immediately removed from the project area and will be subject to termination of employment.

APPENDIX B
WILTEL WYOMING POWERLINE EXTENSION MAPS

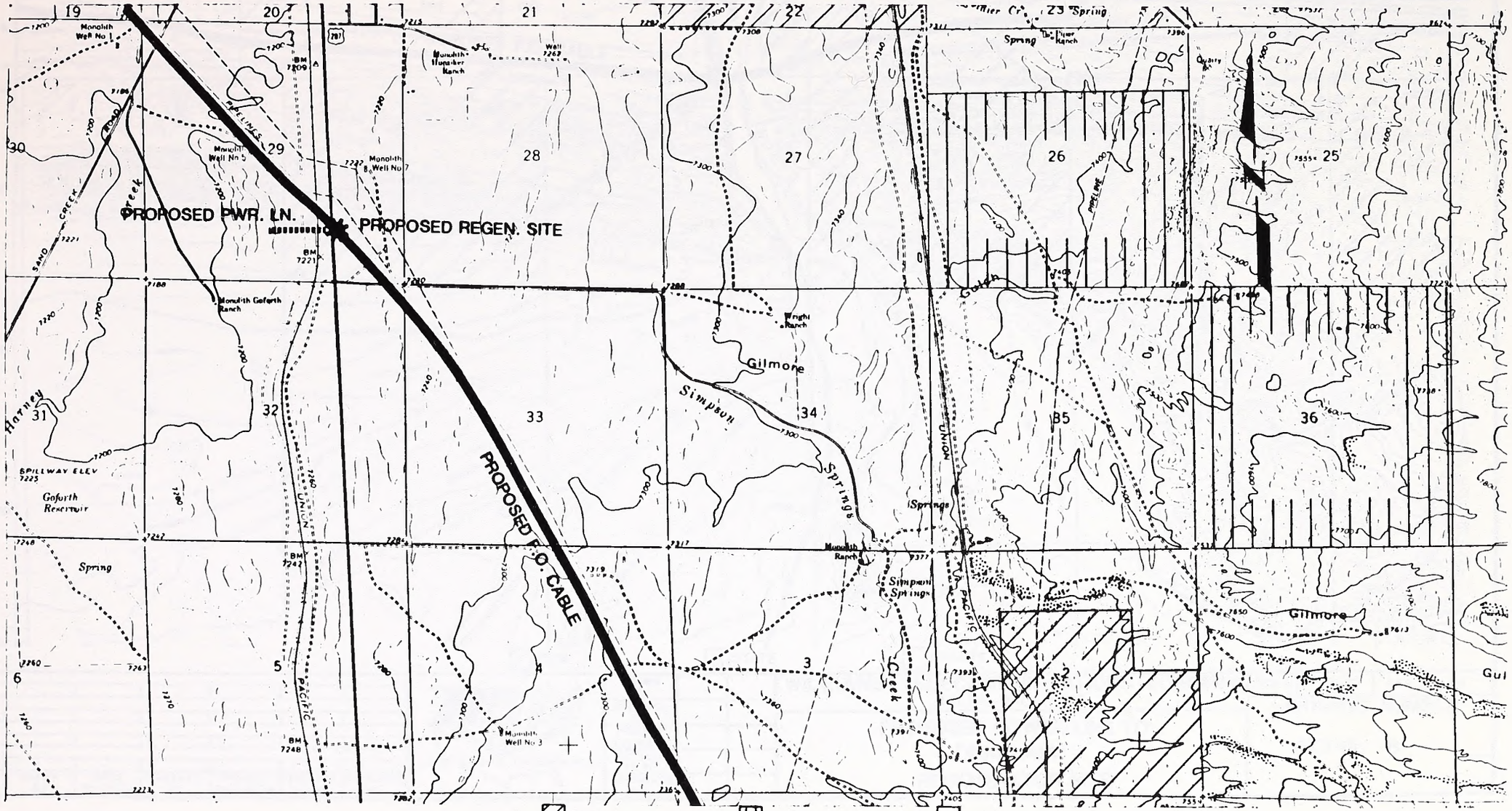

ISSUE NUMBER	DRAWN BY	DATE REVISED	CHECKED BY	PROJECT ENGINEER	SECTION HEAD	APPROVED BY

WilTel
LEADER IN DIGITAL COMMUNICATIONS

DRAWN BY	
CHECKED BY	
PROJECT ENGINEER	
SECTION HEAD	
APPROVED BY	

WILLIAMS TELECOMMUNICATIONS COMPANY
TULSA, OKLAHOMA

PROPOSED POWER LINE TO "HIGHWAY 287" REGENERATOR SITE

SCALE	1" = 2000'	AFE	412

DRAWING NUMBER

DETAIL A

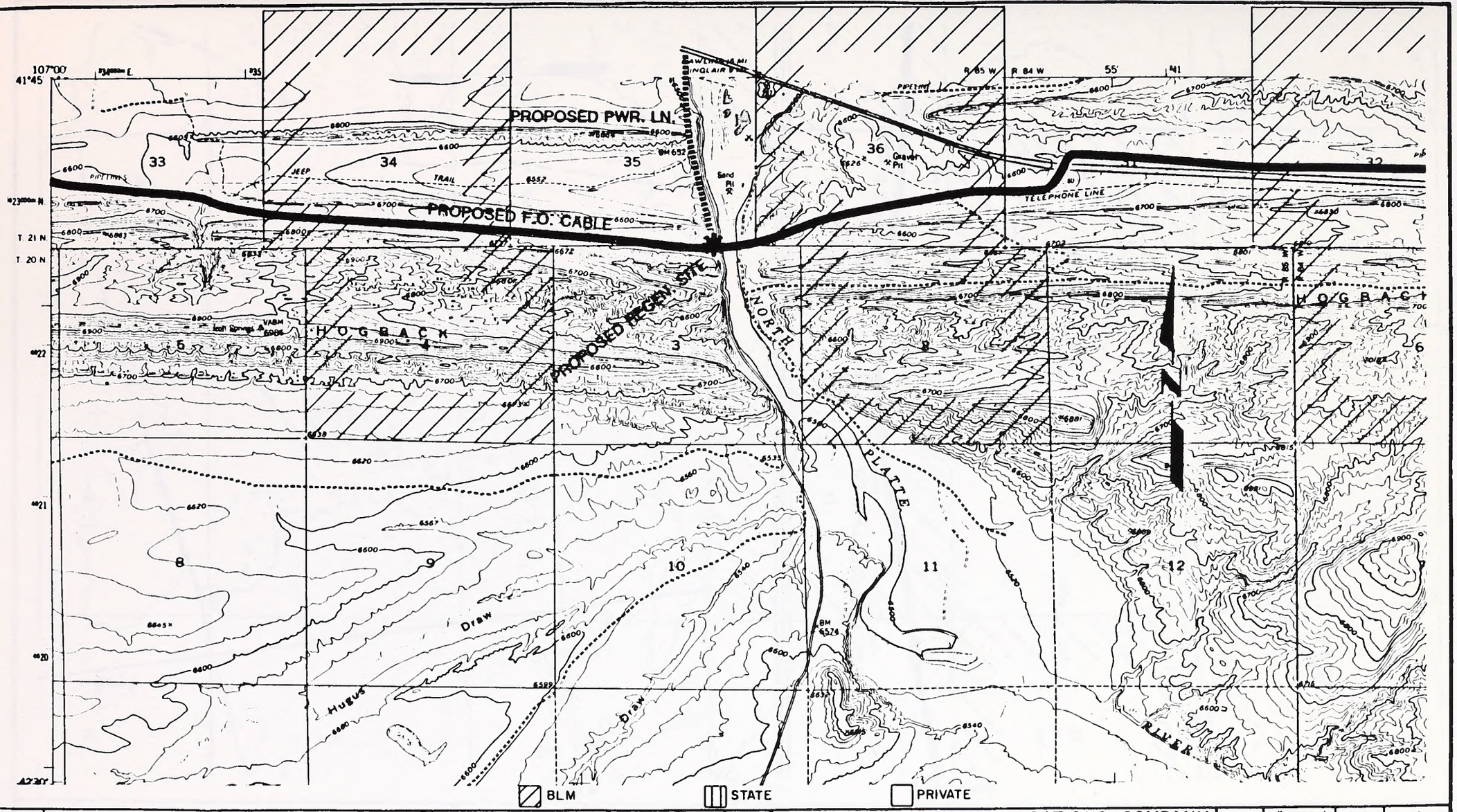

ISSUE NUMBER	DRAWN BY	DATE REVISED	CHECKED BY	PROJECT ENGINEER	SECTION HEAD	APPROVED BY

WiTel
LEADER IN DIGITAL COMMUNICATIONS

DRAWN BY	
CHECKED BY	
PROJECT ENGINEER	
SECTION HEAD	
APPROVED BY	

WILLIAMS TELECOMMUNICATIONS COMPANY
TULSA, OKLAHOMA

PROPOSED POWER LINE TO
"SINCLAIR"
REGENERATOR SITE

SCALE	1" = 2000'	AFE	412

DRAWING NUMBER

DETAIL B

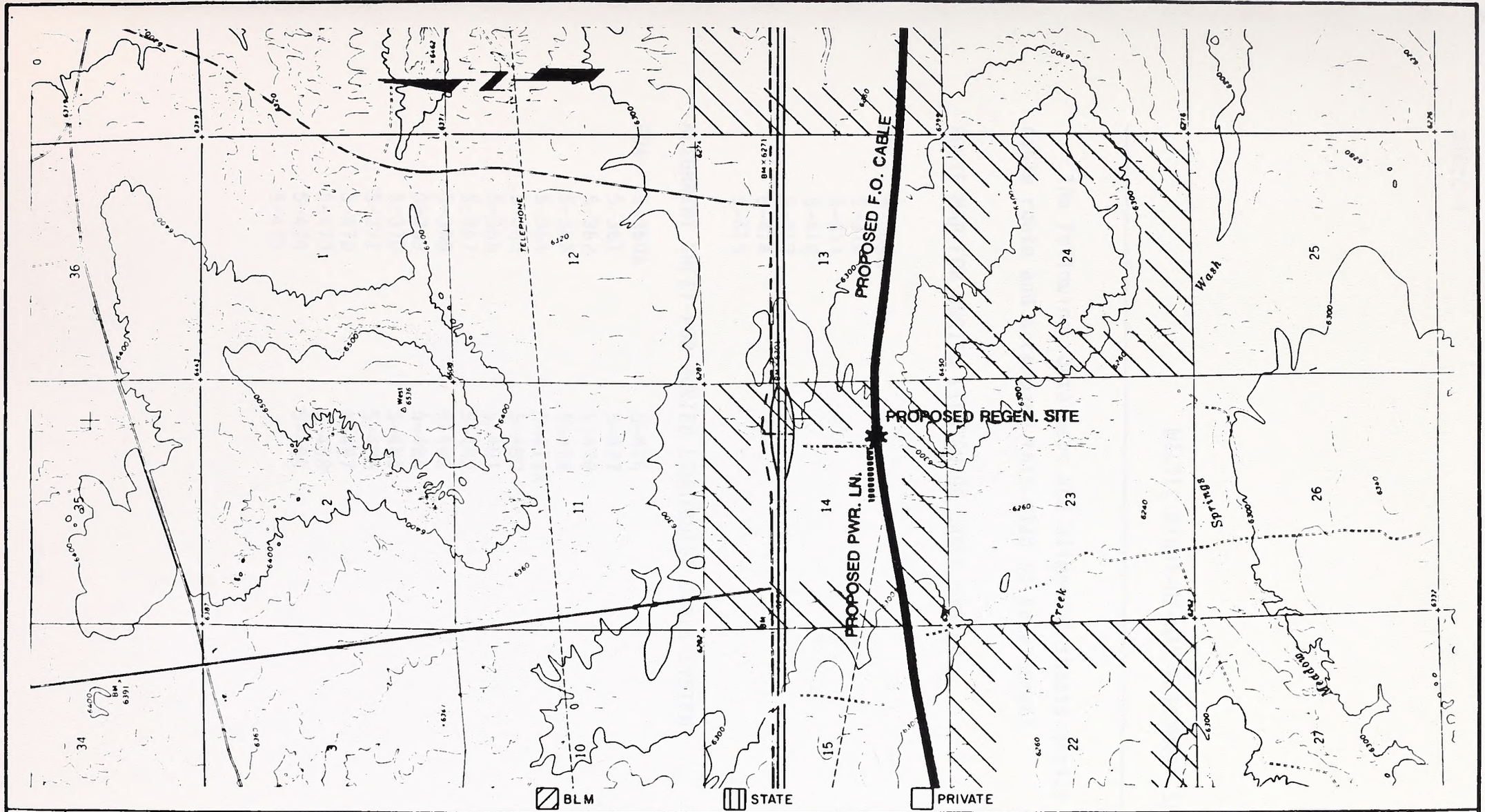

ISSUE NUMBER	DRAWN BY	DATE REVISED	CHECKED BY	PROJECT ENGINEER	SECTION HEAD	APPROVED BY

WilTel
LEADER IN DIGITAL COMMUNICATIONS

DRAWN BY	
CHECKED BY	
PROJECT ENGINEER	
SECTION HEAD	
APPROVED BY	

WILLIAMS TELECOMMUNICATIONS COMPANY
TULSA, OKLAHOMA

PROPOSED POWER LINE TO
"LITTLE AMERICA"
REGENERATOR SITE

SCALE	1" = 2000'	A.F.E.	412

DRAWING NUMBER

DETAIL C

APPENDIX C

WILTEL RIGHT-OF-WAY ALIGNMENT SHEETS FOR WYOMING

The following route maps and alignment sheets depict the proposed cable route and accompany this Plan of Development.

ROUTE MAP FOR BURIED LIGHTGUIDE CABLE SYSTEM

FOS- 5-309A
5-310
5-311
5-412
5-413
5-414
5-415

ALIGNMENT SHEET FOR BURIED LIGHTGUIDE CABLE SYSTEM

FOA-	5-360A	5-476
	5-361	5-477
	5-362	5-478
	5-363	5-479
	5-364	5-479A
	5-365	5-480
	5-366	5-481
	5-367	5-482
	5-368	5-483
	5-369	5-484
	5-370	5-485
	5-371	5-486
	5-472	5-487
	5-473	5-488
	5-474	5-489
	5-475	